Connectors – angle brackets

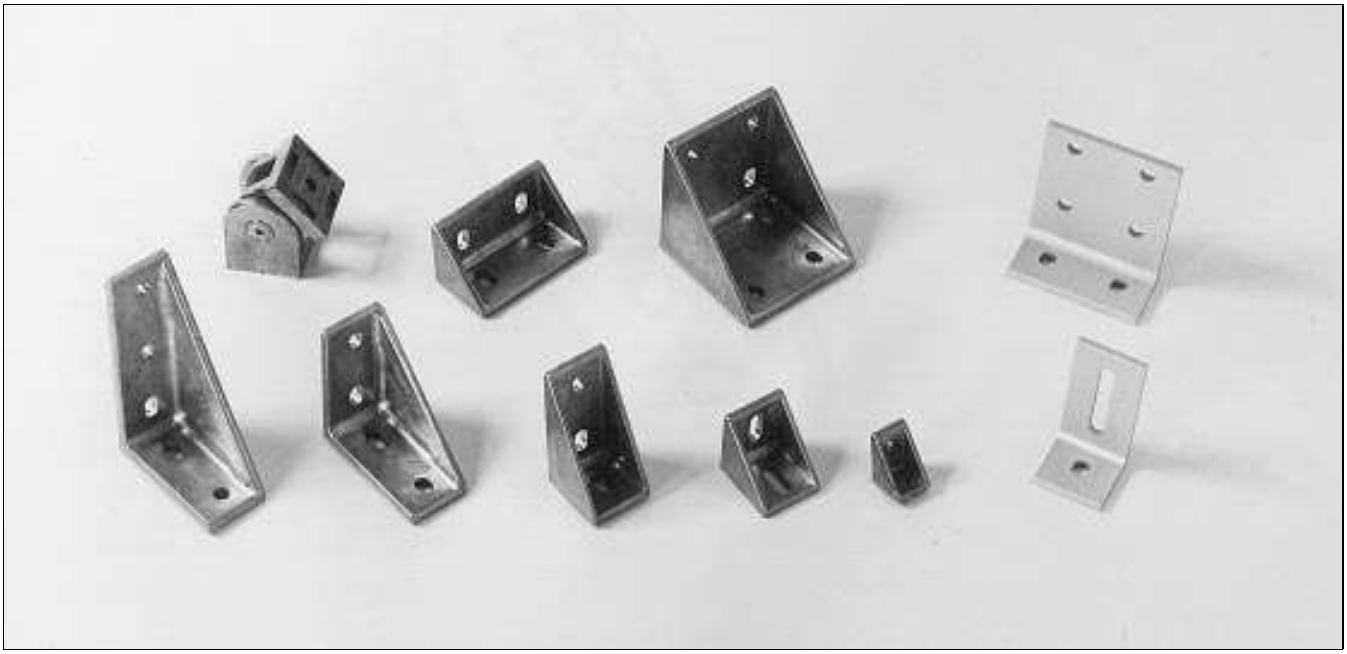

Angle brackets

Angle brackets XMFA../XLFA are used to connect beams end to side or side-to-side. See Fig. 1. They exist in two versions, die-cast and extruded.

Extruded angle brackets (2)

The extruded brackets are mostly used for attaching limit switches, photo cells, sensors, etc.; and for frameworks with very light loads.

Die-cast angle brackets (3–4)

Die-cast angle brackets are strongest and specially aimed for frameworks.

Bracket XLFA 24 is suitable for connection of small beams in the XCBB ..×24×... series to the other XC beams. See Fig. 3.

Bracket XLFA 44 B has elongated holes which makes it suitable for connection to 44 mm beams as well as to 64 mm beams. See Fig. 4.

The M8 screws should be tightened to a torque of 24 Nm (lubricated joint).

1

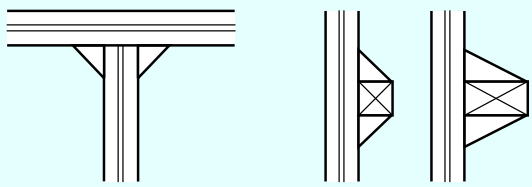

XMFA/XLFA

2

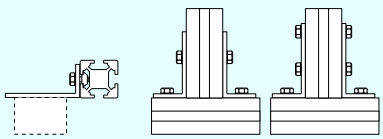

3

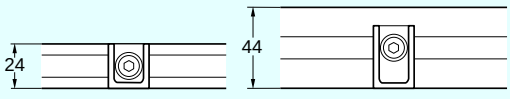

XLFA 24

4

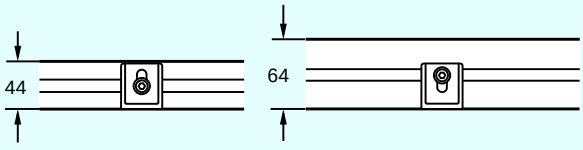

XLFA 44 B

Connectors – angle brackets

Stay brackets

Two stay bracket types are available which fit to the end of beam XCBM ..×44.

Adjustable stay brackets (1)

The adjustable type, XCFJ 44 F, makes it possible to build connections or stays of optional length and angle. See Fig. 1.

When fitting the stay bracket to the beam end, ensure that the hole in the beam profile is deburred and threaded (M8).

Fixed stay brackets (2, 3)

The fixed stay bracket, XCAB 44, is an extruded connector especially designed for 45-degree corners. See Fig. 2. Mounting: see Fig. 3.

1

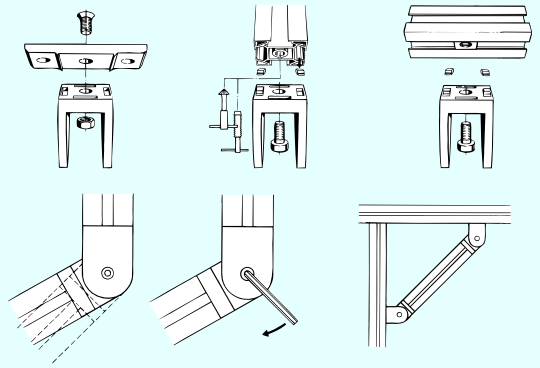

XCFJ 44 F

2

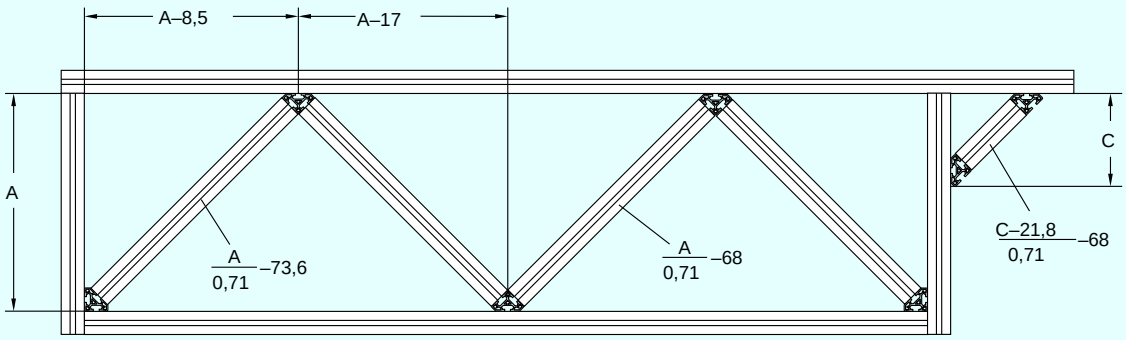

3

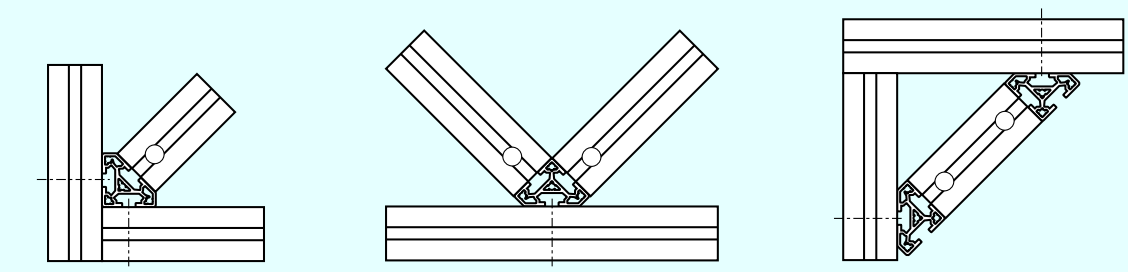

XCAF ...
XCAQ 20 CA, MF6S 8×18, XCAN 8 (2)

XCAF ... (2)
XCAQ 20 CA, MF6S 8×18, XCAN 8

XCAF ... (2)
XCAQ 20 CA, MF6S 8×18, XCAN 8

Angle brackets, die-cast

XMFA 84 A

Angle bracket
Aluminium, die-cast
Mounting:
M6S 8×16 (8)
BRB 8,4×16 (8)
XCAN 8 (8)

XMFA 84 B

Angle bracket
Aluminium, die-cast
Mounting:
M6S 8×16 (4)
BRB 8,4×16 (4)
XCAN 8 (4)

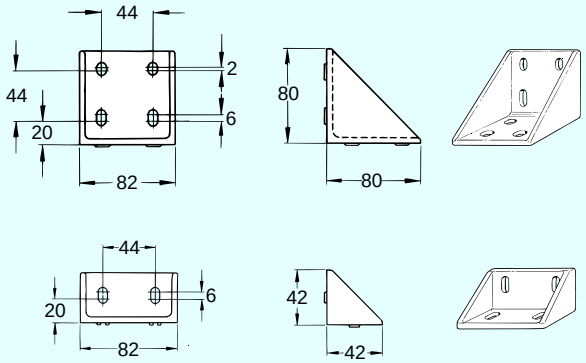

XLFA 44 A

Angle bracket
Aluminium, die-cast
Mounting:
M6S 8×16 (4)
BRB 8,4×16 (4)
XCAN 8 (4)

XLFA 44 B

Angle bracket
Aluminium, die-cast
Mounting:
M6S 8×16 (2)
BRB 8,4×16 (2)
XCAN 8 (2)

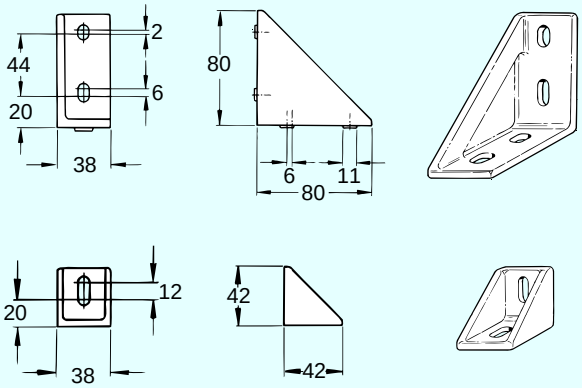

XLFA 44 C

Angle bracket
Aluminium, die-cast
Mounting:
M6S 8×16 (3)
BRB 8,4×16 (3)
XCAN 8 (3)

XLFA 44 D

Angle bracket
Aluminium, die-cast
Mounting:
M6S 8×16 (5)
BRB 8,4×16 (5)
XCAN 8 (5)

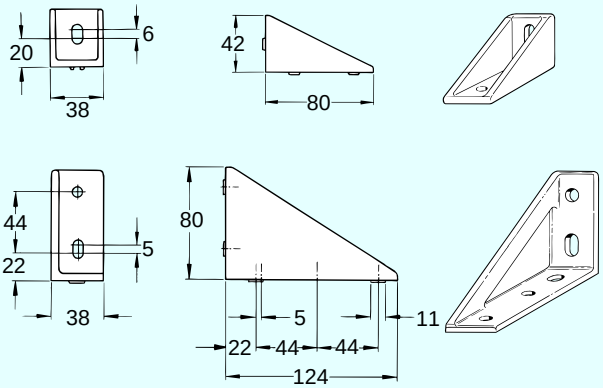

XLFA 24

Angle bracket
Aluminium, die-cast
Mounting:
MC6S 6×14 (2)
BRB 6,4×12 (2)
XCAN 6 (2)

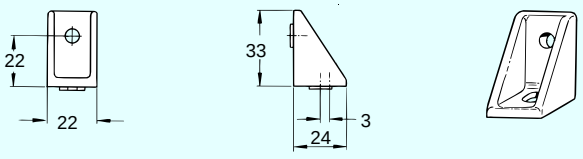

Angle brackets, extruded

XMFA 84

Angle bracket
Aluminium, anodized
Mounting:
M6S 8×16 (6)
BRB 8,4×16 (6)
XCAN 8 (6)

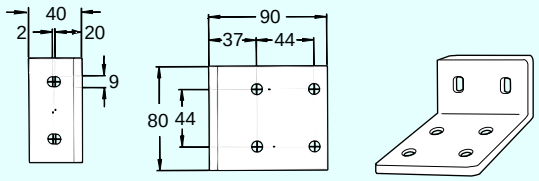

XLFA 44

Angle bracket
Aluminium, anodized
Mounting:
M6S 8×16 (2)
BRB 8,4×16 (2)
XCAN 8 (2)

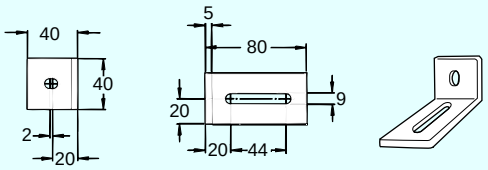

Stay bracket

XCAB 44

Stay bracket, 45°
Aluminium, anodized
Mounting: see page 25

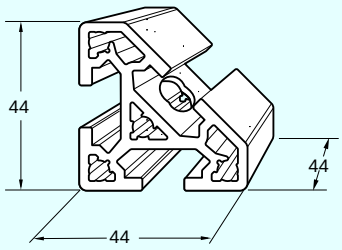

XCFJ 44 F

Stay bracket, including reversible guide lugs
Zinc, die-cast
Mounting:
MLC6S 8×14 (2)
XCAN 8 (2)
(beam side) or
MLC6S 8×30 (2)
(beam end)

