# Datasheet - NDRZ50GR/RT

Command and signalling devices / Push buttons and pilot lights - "N" Program / NDR - Emergency stop / latched pushbutton



(Minor differences between the printed image and the original product may exist!)

- with latching
- Emergency stop latching pushbutton

## Ordering details

| | |
|---|---|
| Product type description | NDRZ50GR/RT |
| Article number | 1177170 |
| EAN code | |

## Approval

| | |
|---|---|
| Approval | USA/CAN<br>BG |

## Global Properties

| | |
|---|---|
| Product name | NDR - Emergency stop latching pushbutton |
| Standards | IEC/EN 60947-1, EN 60947-5-1 |
| Compliance with the Directives (Y/N) | Yes |
| Suitable for safety functions (Y/N) | Yes |
| Mounting | mounting flange EFM |
| Materials | |

| | |
|---|---|
| - Material of the operators | ABS |
| - Material of the front ring | ABS, Chromium-plated |
| - Material of the bellows | Silicone |
| Design | Emergency stop latching pushbutton - Front plate mounting |
| Form | Round |
| Color | |
| - Colour of the operating element | red |
| - Colour of the bellows | Black |
| - Colour of the front ring | Silver |
| Weight | 50 g |
| Manner of using | |
| Can be illuminated (Y/N) | No |
| Emergency-Stop button (Y/N) | Yes |

## Mechanical data

| | |
|---|---|
| Mechanical life | 100.000 operations |
| restistance to shock | 30 g / 18 ms |
| Latching (Y/N) | Yes |
| Unlocking type | Draw unlocking |
| Probing possible (Y/N) | No |
| mounting flange available (Y/N) | Yes |
| Snap mechanism integrated in device head (Y/N) | Yes |
| External snap mechanism (Y/N) | No |
| Front plate thickness | |
| - min. front plate thickness | 1.5 mm |
| - max. front plate thickness | 6 mm |
| Tightening torque for fixing screws | 0,6 Nm |

## Ambient conditions

| | |
|---|---|
| Ambient temperature | |
| - Min. environmental temperature | −25 °C |
| - Max. environmental temperature | +80 °C |
| Storage and transport temperature | |
| - Min. Storage and transport temperature | − |
| - Max. Storage and transport temperature | − |
| Fully insulated (Y/N) | Yes |
| Sealing type | membrane, lip seal |
| Protection type IP | IP67, IP69K |

## Dimensions

| | |
|---|---|
| Dimensions | |
| - Height | 45 mm |
| - diameters for the actuating heads | Ø 50 mm |
| - Hole, diameter | 22.3 mm + 0,4 mm |
| Spacing | 50 x 50 mm |

## Images

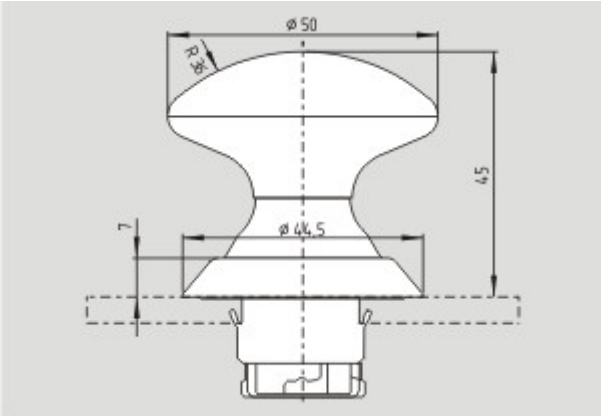

Dimensional drawing (basic component)

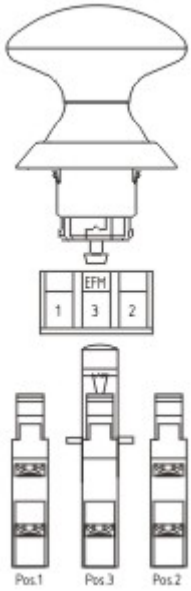

Application

## System components

### Accessories



**1014387 - ELM**

### contact element

**1026059 - EFK30.3**

- Cage clamps
- Mounting flange position 3
- 31-32 (Contact labelling)



• Suitable for EMERGENCY-OFF

---



**1026058 - EFK30.2**

• Cage clamps
• Mounting flange position 2
• 21-22 (Contact labelling)
• Suitable for EMERGENCY-OFF

---



**1026057 - EFK30.1**

• Cage clamps
• Mounting flange position 1
• 11-12 (Contact labelling)
• Suitable for EMERGENCY-OFF

---



**1022139 - EF303.3**

• Screw connection
• Mounting flange position 3
• 51-52; 63-64 (Contact labelling)
• Suitable for EMERGENCY-OFF

---



**1022138 - EF303.2**

• Screw connection
• Mounting flange position 2
• 31-32; 43-44 (Contact labelling)
• Suitable for EMERGENCY-OFF

---



**1022137 - EF303.1**

• Screw connection
• Mounting flange position 1
• 11-12; 23-24 (Contact labelling)
• Suitable for EMERGENCY-OFF

---



**1023938 - EF220.3**

• Screw connection
• Mounting flange position 3
• 51-52; 61-62 (Contact labelling)
• Suitable for EMERGENCY-OFF

---

**1024262 - EF220.2**

• Screw connection



• Mounting flange position 2
• 31-32; 41-42 (Contact labelling)
• Suitable for EMERGENCY-OFF

---



**1023927 - EF220.1**

• Screw connection
• Mounting flange position 1
• 11-12; 21-22 (Contact labelling)
• Suitable for EMERGENCY-OFF

---

K.A. Schmersal GmbH, Möddinghofe 30, D-42279 Wuppertal
The data and values have been checked throroughly. Technical modifications and errors excepted.
Generiert am 28.09.2011 - 10:09:04h Kasbase 1.5.5 DBI