Pressure Switches, Series PM1, flange, form A, With valve plug connector

R412010718

- Robust housing
- Available with the pressure ranges -0.9 to 0 bar, -0.9 to 1 bar, -0.9 to 3 bar or 0.2 to 16 bar
- Various process connections
- ATEX version available

AVENTICS Series PM1 Pressure switches

The AVENTICS Series PM1 is a compact pressure switch for measuring compressed air and hydraulic oil. The Series PM1 allows users to select between different pressure ranges from -0.9 to 16 bar.



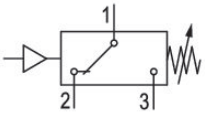

Technical information

Industry	Industrial
Type	Mechanical
Type	Diaphragm, spring loaded, adjustable
Mounting orientation	Any
Operating pressure min	0.2 bar
Operating pressure max	16 bar
Protection against overpressure	80 bar
Operational voltage	12-125 V DC 12-250 V AC
Max. shock resistance	15 g IEC 60068 - 2-64
Vibration resistance	10 g (60 - 500 Hz) IEC 60068 - 2-6
Precision (% of full scale value)	± 2 %
Hysteresis	max. switching pressure difference
Measurement	Relative pressure
Compressed air connection	Ø 5x1,5
Compressed air connection type	Flange with O-ring
Min. medium temperature	-10 °C
Max. medium temperature	80 °C
Medium	Compressed air Hydraulic oil

Pressure Switches, Series PM1, flange, form A, With valve plug connector

R412010718

Valve plug connector	With valve plug connector
Electrical connection type	Plug
Electrical connection size	EN 175301-803, form A
Min. ambient temperature	-20 °C
Max. ambient temperature	80 °C
Switching element	microswitch (input/output)
Max. switching frequency	100/min.
Switching point	adjustable
Protection class	IP65
Mounting types	via through holes
Weight	0.13 kg

Material

Housing material	Aluminum
Seal material	Acrylonitrile butadiene rubber
Material electrical connection	Brass
Part No.	R412010718

Technical information

Switching function increasing pressure: contact switches from 1-2 to 1-3. Switching function decreasing pressure: contact switches from 1-3 to 1-2.

Notice: Too-high currents can damage contacts. Inductive or capacitive loads must be equipped with appropriate spark-quenching!

The microswitch has silver-plated contacts.

Please observe the pin assignment when selecting plug connectors.

Min. switching pressure range 0.2 bar falling/0.5 bar rising

The pressure dew point must be at least 15 °C less than ambient and medium temperature and may not exceed 3 °C.

The oil content of compressed air must remain constant during the life cycle.

Use only the approved oils from AVENTICS. Further information can be found in the “Technical information” document (available in https://www.emerson.com/en-us/support).

Pressure Switches, Series PM1, flange, form A, With valve plug connector

R412010718

Dimensions in mm

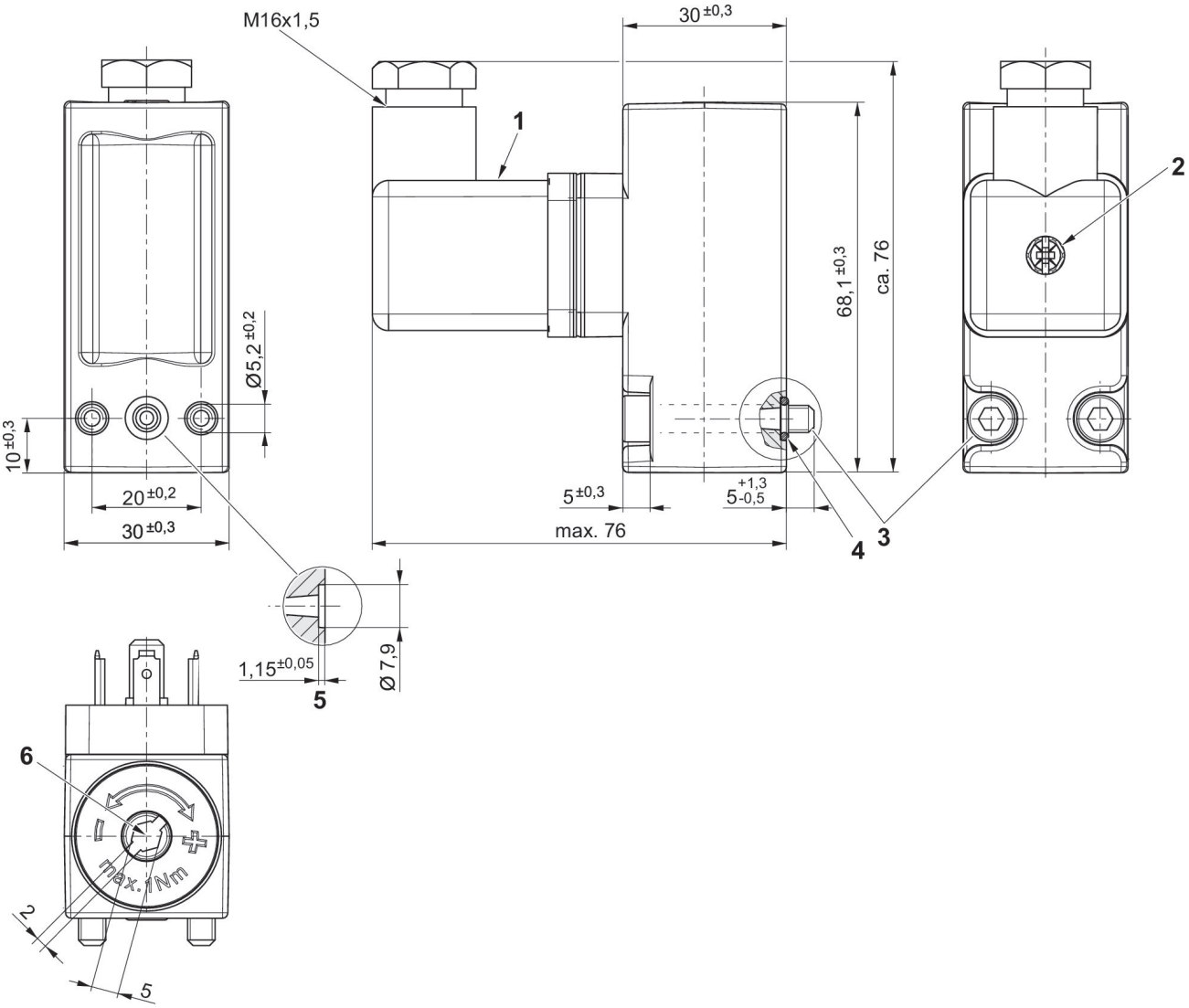

1) Valve plug connector
2) Mounting screw
3) cylinder screw M5x30 (included in scope of delivery)
4) O-ring Ø5x1,5 (included)
5) O-ring countersink
6) Adjustment screw, self-holding

Pressure Switches, Series PM1, flange, form A, With valve plug connector

R412010718

Differential switching pressure characteristic curve (0,2 - 16 bar)

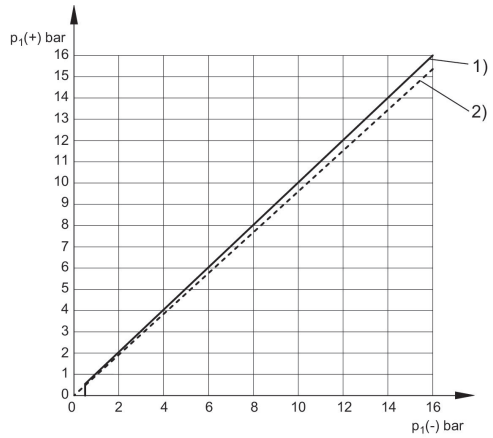

p1 (+) = upper switching pressure with increasing pressure
p1 (-) = lower switching pressure with decreasing pressure
1) Rising
2) Falling

PIN assignment for valve plug connectors

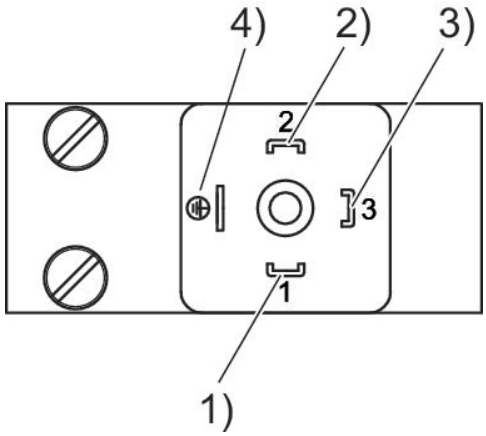

Pin assignments

Pin	Allocation
1	+UB
2	break contact
3	NO (make contact)
4	GND

Max. permissible continuous current I max. [A] with inductive load

U [V]	I [A] 1) 3)	I [A] 2) 4)
30-250	3	-
30 / 48 / 60 / 125	-	2 / 0,55 / 0,4 / 0,05

reference cycle: 30/min., reference temperature: +30 °C
1) AC
2) DC
3) cos ≈ 0,7°
4) L/R ≈ 10 ms

Max. permissible continuous current I max. [A] with ohmic load

U [V]	I [A] 1)	I [A] 2)
30-250	5	-
30 / 48 / 60 / 125	-	3 / 1,2 / 0,8 / 0,4

reference cycle: 30/min., reference temperature: +30 °C
1) AC
2) DC