Inductive Sensors

BES Q08ZC-PSC20B-BP00,32-GS49
Order Code: BES01TK

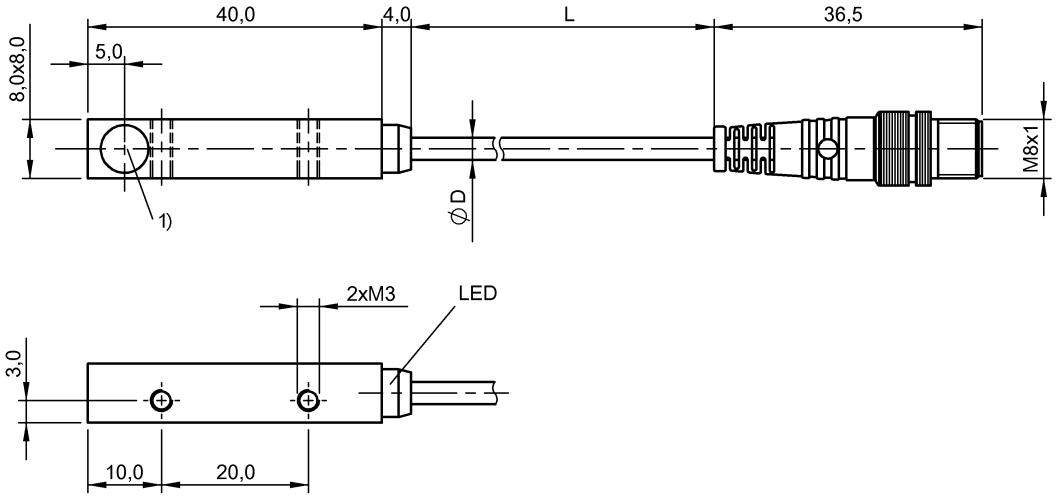

1) Sensing surface

Basic features

Approval/Conformity	cULus CE EAC WEEE
Basic standard	IEC 60947-5-2

Display/Operation

Function indicator	yes
Power indicator	no

Electrical connection

Cable diameter D	3.00 mm
Cable length L	0.32 m
Connection	M8x1-Male, 3-pin
Connection type	Cable with connector, 0.32 m, PUR
Polarity reversal protected	yes
Protection against device mix-ups	yes
Short-circuit protection	yes

Electrical data

Load capacitance max. at Ue	0.5 µF
Min. operating current Im	0 mA
No-load current Io max., damped	12 mA
No-load current Io max., undamped	4 mA
Operating voltage Ub	10...30 VDC
Output resistance Ra	33.0 kOhm + D
Rated insulation voltage Ui	75 V DC
Rated operating current Ie	200 mA
Rated operating voltage Ue DC	24 V
Rated short circuit current	100 A
Ready delay tv max.	10 ms
Residual current Ir max.	80 µA
Ripple max. (% of Ue)	15 %
Switching frequency	3000 Hz
Utilization category	DC -13
Voltage drop static max.	2.5 V

Environmental conditions

Ambient temperature	-25...70 °C
Contamination scale	3
EN 60068-2-27, Shock	Half-sinus, 30 g_n, 11 ms
EN 60068-2-6, Vibration	55 Hz, amplitude 1 mm, 3x30 min
IP rating	IP67

Functional safety

MTTF (40 °C)	830 a

Inductive Sensors

BES Q08ZC-PSC20B-BP00,32-GS49
Order Code: BES01TK

Interface

Switching output	PNP normally open (NO)

Material

Housing material	Zinc, Die casting
Material jacket	PUR
Material sensing surface	PBT

Mechanical data

Dimension	40 x 8 x 8 mm
Installation	for flush mounting
Size	8x8

Range/Distance

Assured operating distance Sa	1.6 mm
Hysteresis H max. (% of Sr)	15.0 %
Rated operating distance Sn	2 mm
Real switching distance sr	2 mm
Repeat accuracy max. (% of Sr)	5.0 %
Switching distance marking	■■
Temperature drift max. (% of Sr)	10 %
Tolerance Sr	±10 %

Remarks

The sensor is functional again after the overload has been eliminated.

For more information about MTTF and B10d see MTTF / B10d Certificate

Indication of the MTTF- / B10d value does not represent a binding composition and/or life expectancy assurance; these are simply experiential values with no warranty implications. These declared values also do not extend the expiration period for defect claims or affect it in any way.

Connector Drawings



Wiring Diagrams

