E21203

Mounting set for position sensors

M12 ANGLE BRACKET **500**

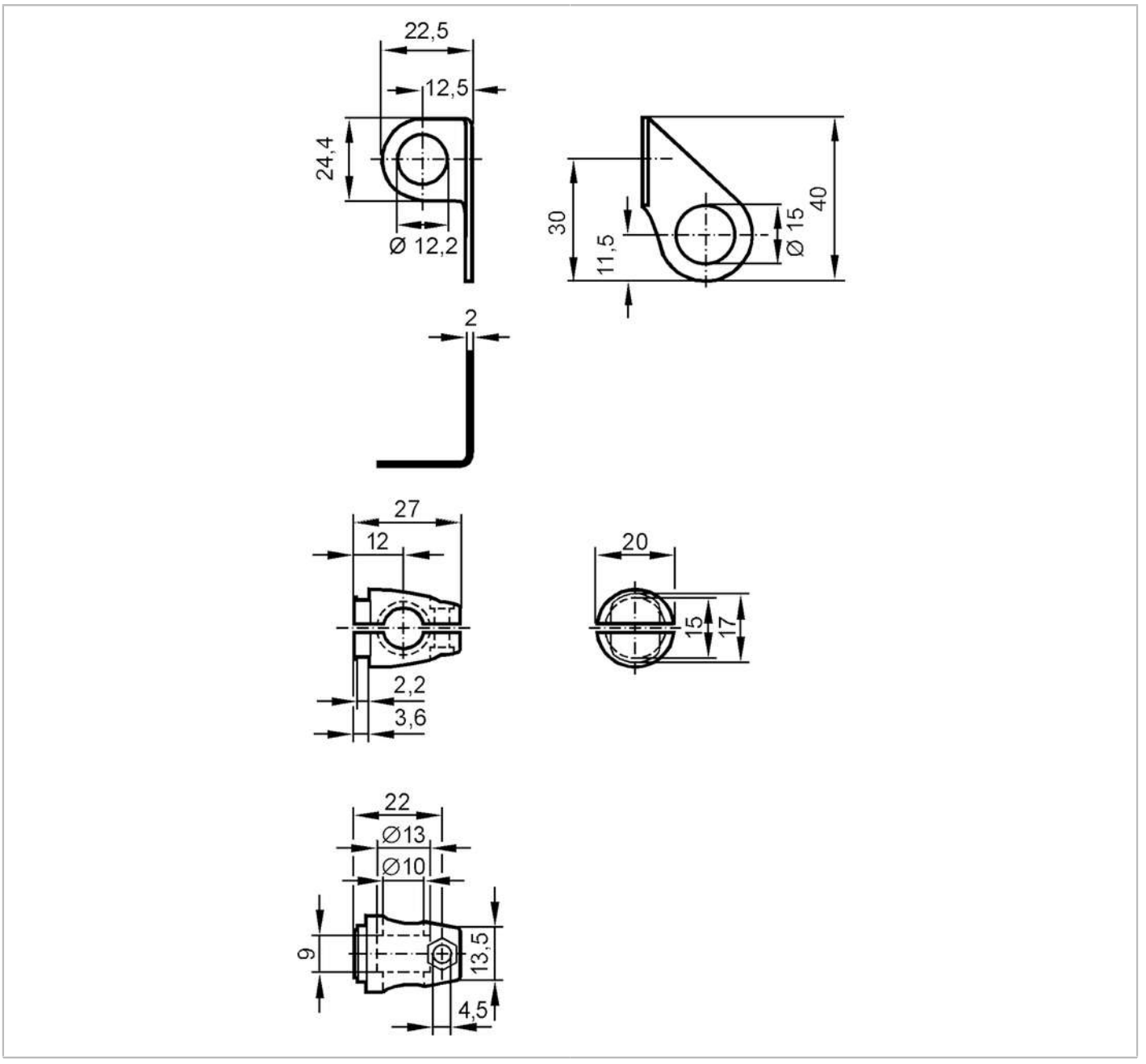

Application		
Design		clamp mounting
Mechanical data		
Weight	[g]	53
Type of mounting		Mounting rod; (Ø 10 mm)
Dimensions	[mm]	Ø 12.2
Materials		fixture: stainless steel (1.4571/316Ti); Clamp: stainless steel (1.4408)
Remarks		
Pack quantity		1 pcs.