DETAIL A
SCALE 1 / 2
SIDE VENTS

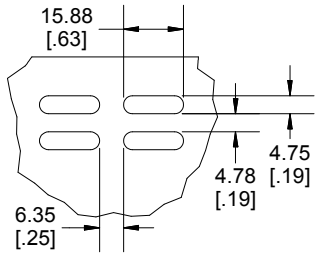

BACK VIEW OF ENCLOSURE

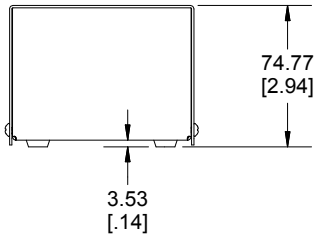

SIDE VIEW OF ENCLOSURE

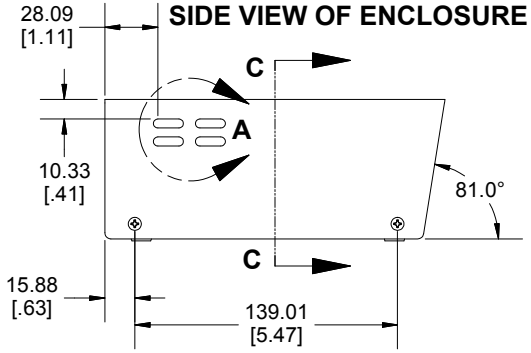

FRONT VIEW OF ENCLOSURE

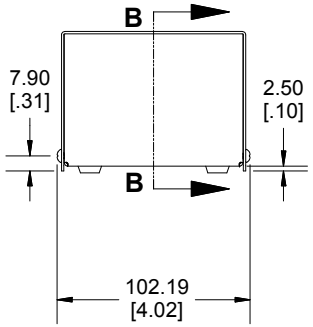



BOTTOM VIEW OF ENCLOSURE

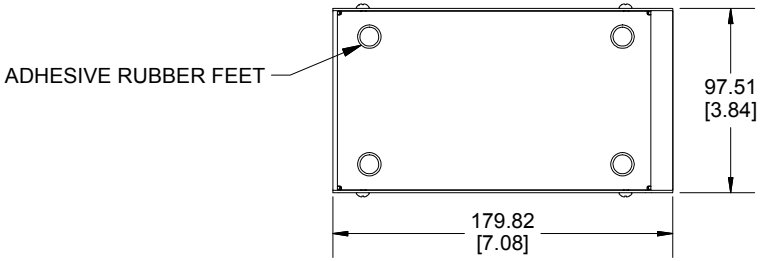

SECTION B-B
SIDE VIEW

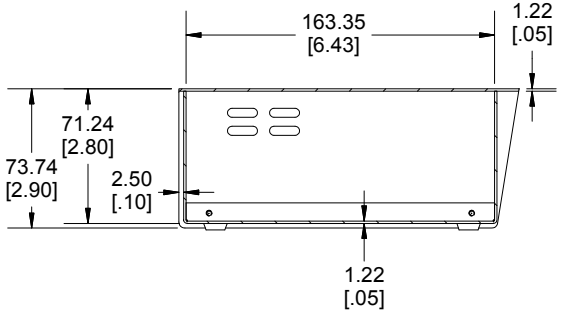

SECTION C-C
END VIEW

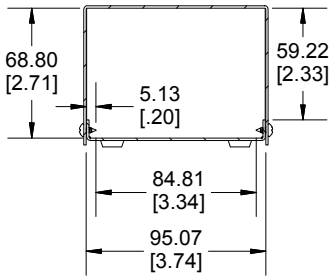

Enclosures can be Factory Modified (Milling, Drilling, Printing etc.)
Contact Factory mjm@hammondmfg.com for quotes
Solid models of this enclosure available in STEP or IGES.

NOTE
Case Includes Adhesive Rubber Feet and Required Hardware.
Enclosure Case is Made of 0.05" Steel.

PART NUMBERS	
511-0900 Enclosure	
Smooth Light Grey Top Case Dark Satin Grey Base Case	511-0900
ACCESSORIES	
Plated Cover Screws (Pkg 50) [#6 x 1/4 Self Tapping]	SC19482-50
Grey Self-Adhesive Rubber Feet (Pkg 4)	1421T2GY

Dimensions:
mm
[inches]

HAMMOND MANUFACTURING™

511-0900

www.hammondmfg.com