Product Specification

A087/ ...

Low Profile Stainless Steel Base and Stud *Levelling Foot Range*



Materials ...

Base - Stainless Steel type 303 with Inset Nitrile Rubber Pad

Stud - Stainless Steel type 303

Part No.	Thread Size D1 (mm)	Thread Length L (mm)	Base Diameter D2 (mm)	Overall Height H (mm)	Max Load (kg)
A087 / 001	M12	75	55	102	750
A087 / 002	M12	125	55	152	750
A087 / 003	M12	150	55	177	750
A087 / 004	M16	75	65	108	1250
A087 / 005	M16	125	65	158	1250
A087 / 006	M16	150	65	183	1250

A087 / 010	M20	125	75	166	1750
A087 / 011	M20	150	75	191	1750
A087 / 012	M20	200	75	241	1750
A087 / 016	M24	125	100	177	2500
A087 / 017	M24	150	100	202	2500
A087 / 018	M24	200	100	252	2500

Dimensions are approximate

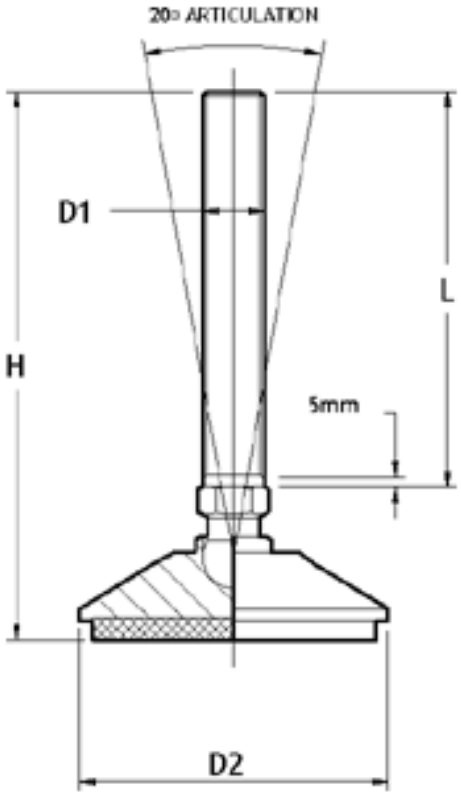

General

The Levelling Feet are suitable for use in a wide range of Industries such as:-

Food Processing, Medical, Dairy, Electronic, Laser Robotics and Laboratory Machinery/Equipment.

Applications include:-

Conveyors, Weighing Machines, Food, Drink and Pharmaceutical Processing Equipment, Packaging Machinery, Heavy Duty Machine Tools and Special

Purpose Machines.

Options Available

Hygienic Seal:
Provides a flexible cover over the ball and socket arrangement.