SUL 191 w **Article number: 1910011**

Description



- Analogue time switch
- 1 channel
- Weekly program
- With power reserve (NiMH rechargeable battery)
- 84 switching segments
- Quartz controlled
- Shortest switching time: 2 hours
- Clock hands for time display and in addition 12/24 hour recognition
- Simple summer/winter time correction
- Time can be changed clockwise or anti-clockwise
- DuoFix spring terminals
  - For 2 conductors each
  - Wire or strand (with or without wire end sleeve)
  - Wire diameter: 0.5 - 2.5 mm²
  - Button for releasing plug-in connection
- Switching preselection
- Manual switch with 3 positions: Continuous ON/AUTO/continuous OFF
- Switching status display

Technical data

Operating voltage	110 – 230 V AC
Frequency	50 – 60 Hz
Number of channels	1
Program	Weekly program
Width	3 modules
Installation type	DIN rail
Type of connection	DuoFix spring terminals
Drive	Quartz-controlled stepper motor
Program	Weekly program
Power reserve	200 hours, approx. 100 hours at 110 V
Switching capacity at 250 V AC, cos φ = 1	16 A
Switching capacity at 250 V AC, cos φ = 0,6	4 A
Shortest switching times	2 h
Programmable all	2 h
Time accuracy	≤ ± 1 s/day (quartz)
Type of contact	Changeover contact
Switching output	Potential-free and phase-independent
Number of switching segments	84
Stand-by consumption	0,5 W
Test approval	VDE
Housing and insulation material	High-temperature resistant, self-extinguishing thermoplastic
Type of protection	IP 20
Protection class	II as per EN 60 730-1
Ambient temperature	-20 °C … +55 °C

Connection example

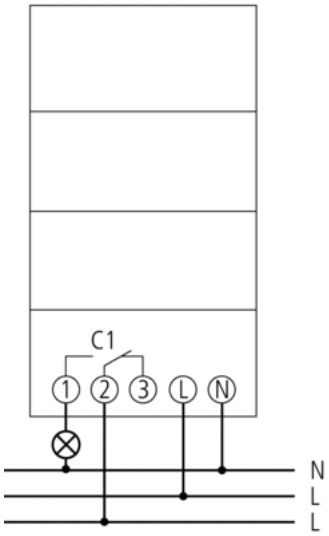

Accessories

Wall mounting kit 52,5 mm

- Article number: 9070050
  Details ▸ www.theben.de



Front panel kit

- Article number: 9070001
  Details ▸ www.theben.de

