Features/Benefits

- *Thru-hole and surface mount models*
- *Miniature size with robust metal cover in black or silver nickel finish*
- *4, 10, & 16 positions*
- *Large choice of codings*
- *Vertical, right angle or reverse versions*
- *RoHS compliant*

Typical Applications

- *Timers, automation components*
- *Computer and peripherals*
- *Alarms, access control, smoke detectors, lighting, home protection*
- *Instrumentation*

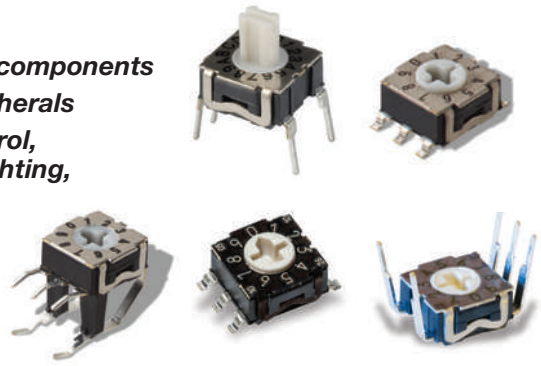

Specifications

CONTACT RATING:
Gold: 100 mA max. 10µ A min. 30 V DC max. 20 mVDC min.
MECHANICAL LIFE: 20,000 indexations
CONTACT RESISTANCE: 100 mΩ max. initial;
150 mΩ after life
INSULATION RESISTANCE: 10^{10} Ω min. initial
DIELECTRIC STRENGTH: 300 Vrms 1 mn
OPERATING TEMPERATURE: -25°C to 85°C.
STORAGE TEMPERATURE: -55°C to 85°C.
PACKAGING:

Quantities

Terminations	Actuator	Tube	Box (in bulk)	Carrier tape	Standard Package
G	Flush, screwdriver slot			1250	1250 (1 reel)
	Shaft for button			750	750 (1 reel)
N	All versions	65			1950 (30 tubes)
V	All versions		150		1500 (10 boxes)
R	Flush, screwdriver slot	65			1950 (30 tubes)
	Shaft for button		150		1500 (10 boxes)

Materials

COVER: Brass, nickel plated (black or silver)
BASE: PPS
ACTUATOR: LCP
MOVABLE CONTACTS: Copper alloy, gold plated.
STATIONARY CONTACTS: Brass, gold plated.
TERMINALS: See page I-28 to I-29
O-RING: Silicone
SOLDERING PROCESS:
- Surface Mount Terminals: Infrared Reflow Soldering in accordance with IEC 61760-1.
- Non Reverse Thru-Hole Terminals: Lead free single or double wave soldering process according to C&K Procedure PS-LF-001
- Reverse Thru-Hole Terminals: Manual soldering: 3 sec / 350°C. Lead free single wave soldering process can be used but validation of the process must be done by customer

Note: Specifications and materials listed above are for switches with standard options. For information on specific and custom switches, consult Customer Service Center.

How To Order

The Build-A Switch concept allows you to mix and match options to create the switch you need. Below is a complete listing of options shown in catalog. To order, simply select desired option from each category and place in the appropriate box.

NOTE: Some of the configurations may not be available or could require some development.

R T E

Number of Positions

RTE04
RTE10
RTE16

ESD Protection and top plate
0 Without ESD - standard plate
1 With ESD - standard plate [2]
B Without ESD - black plate

Actuator
0 Flush, screwdriver slot
2 Shaft for button

Terminations
N Thru-hole
V Right angle
G Surface mount
R Reverse, thru-hole

Switch Function
0 Single pole [1]
1 BCD code
3 Gray Code (for RTE 10)
4 Hexadecimal code (for RTE 16)
7 Gray Code (for RTE16)

Contact/Terminal Material
4 Gold/ lead free tin

First Angle Projection

1 - Single pole function not available for RTE10/RTE16
2 - ESD protection available with "N" and "R" terminations only

SWITCHES WITH STANDARD OPTIONS

PC Mount-Terminal Option N



Right Angle Mount-Terminal Option V



Surface Mount-Terminal Option G



NUMBER OF POSITIONS

RTE04 4 POSITIONS

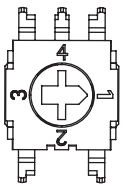

RTE10 10 POSITIONS

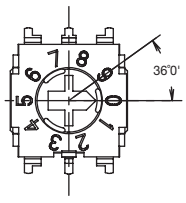

RTE16 16 POSITIONS

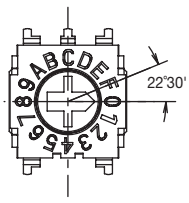

First Angle Projection

Dimensions are shown: Inch (mm)
Specifications and dimensions subject to change

ESD PROTECTION

0 WITHOUT

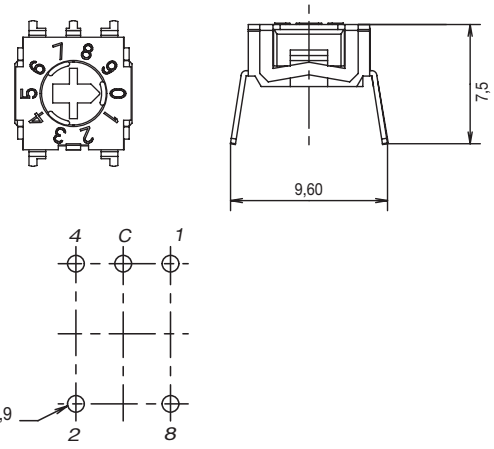

1 WITH

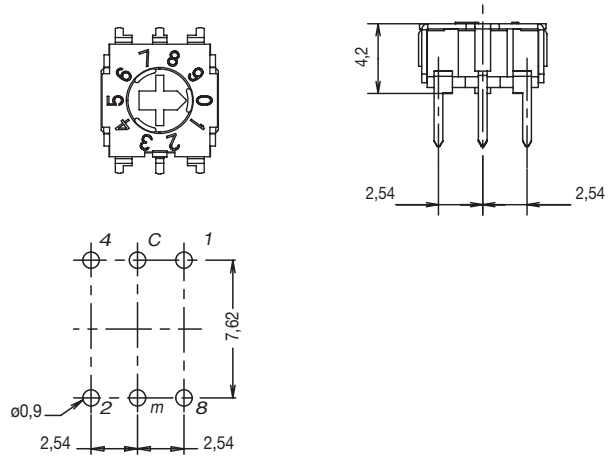

ACTUATOR

0 SCREWDRIVER SLOT

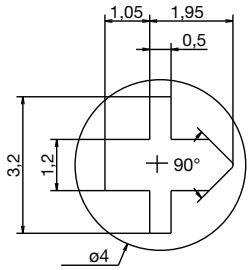

2 SHAFT FOR BUTTON

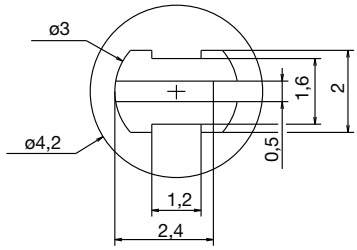

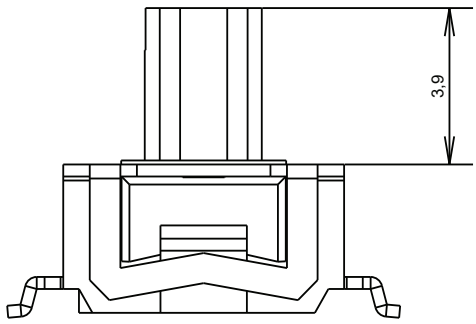

For all RTE versions

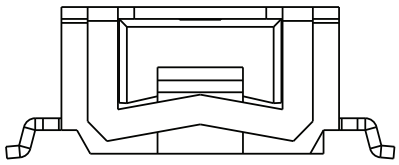

Except for RTE1000Gx4 (SMT)
RTE1600Gx4 (SMT)

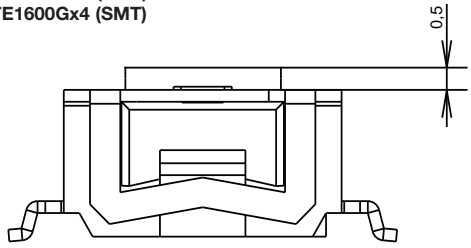

First Angle Projection

Dimensions are shown: Inch (mm)
Specifications and dimensions subject to change

TERMINATIONS

N THRU-HOLE

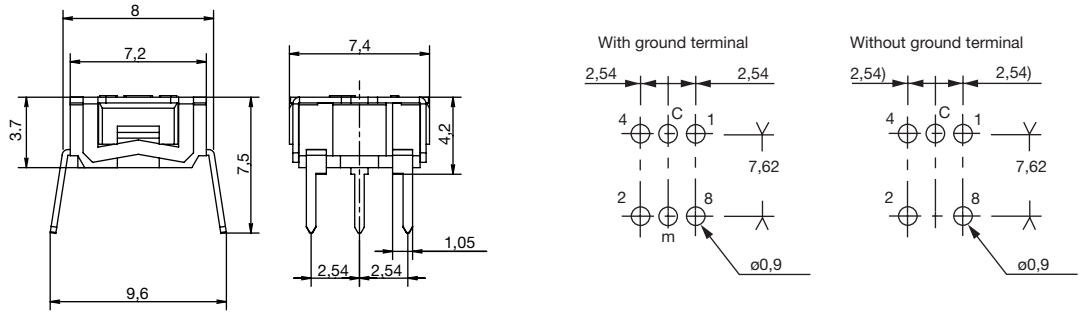

R REVERSE, THRU-HOLE

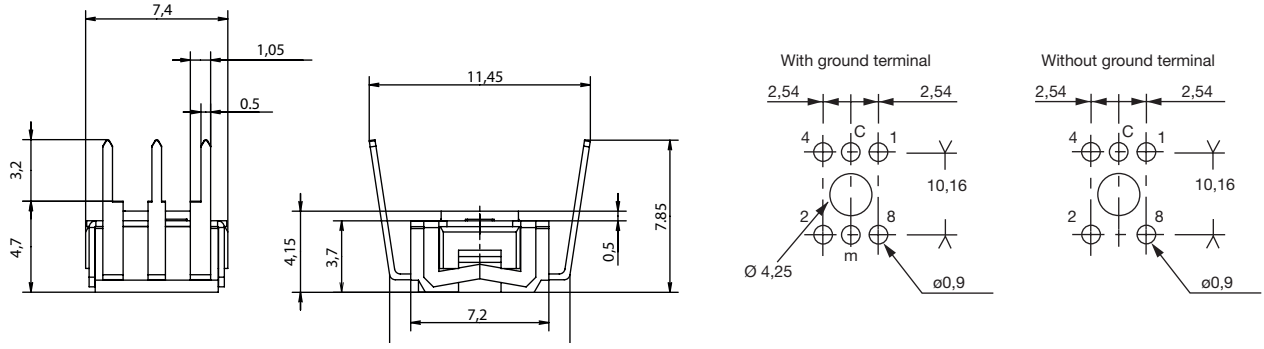

V RIGHT ANGLE, THRU-HOLE

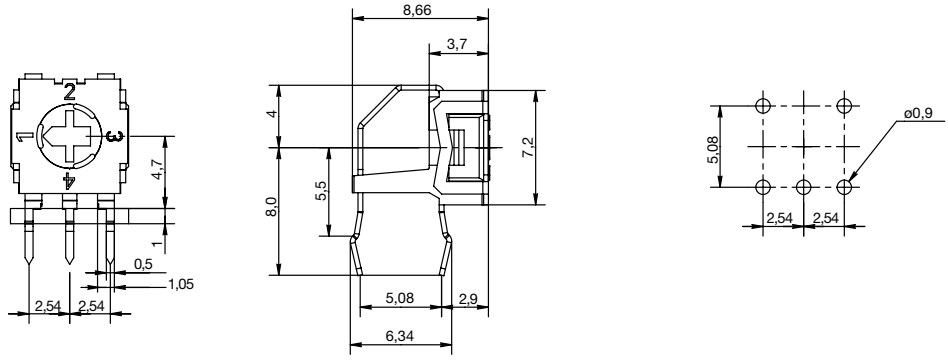

G SURFACE MOUNT

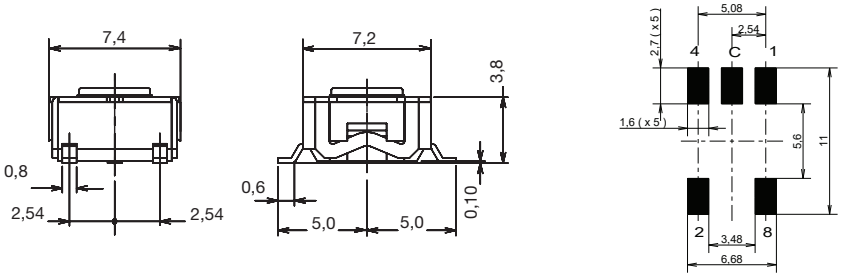

PCB layout seen component side

First Angle Projection

Dimensions are shown: Inch (mm)
Specifications and dimensions subject to change

SWITCH FUNCTION

0 **SINGLE POLE**

POS.	1	2	3	4
C	●	●	●	●
1	●			
2		●		
3			●	
4				●

1 **BCD CODE**

POS.	0	1	2	3	4	5	6	7	8	9
C	●	●	●	●	●	●	●	●	●	●
1		●		●		●		●		●
2			●	●			●	●		
4					●	●	●	●		
8									●	●

3 **GRAY CODE** (for RTE10 only)

POS.	0	1	2	3	4	5	6	7	8	9
C	●	●	●	●	●	●	●	●	●	●
1		●	●			●	●			●
2			●	●	●	●				
4					●	●	●	●	●	●
8									●	●

4 **HEXADECIMAL CODE**

POS.	0	1	2	3	4	5	6	7	8	9	A	B	C	D	E	F
C	●	●	●	●	●	●	●	●	●	●	●	●	●	●	●	●
1		●		●		●		●		●		●		●		●
2			●	●			●	●			●	●			●	●
4					●	●	●	●					●	●	●	●
8									●	●	●	●	●	●	●	●

7 **GRAY CODE** (for RTE04 only)

POS.	1	2	3	4
C	●	●	●	●
1	●			
2		●		
4			●	
8				●

(for RTE16 only)

POS.	0	1	2	3	4	5	6	7	8	9	A	B	C	D	E	F
C	●	●	●	●	●	●	●	●	●	●	●	●	●	●	●	●
1		●	●			●	●			●	●			●	●	
2			●	●	●	●				●	●	●	●			
4					●	●	●	●	●	●	●					
8									●	●	●	●	●	●	●	●

CONTACT MATERIAL

OPTION CODE	CONTACT MATERIAL	TERMINAL PLATING
4	GOLD	LEAD FREE TIN

First Angle Projection

Dimensions are shown: Inch (mm)
Specifications and dimensions subject to change

TAPE AND REEL

Tape and reel for RTExx02Gxx
750 pieces per reel.

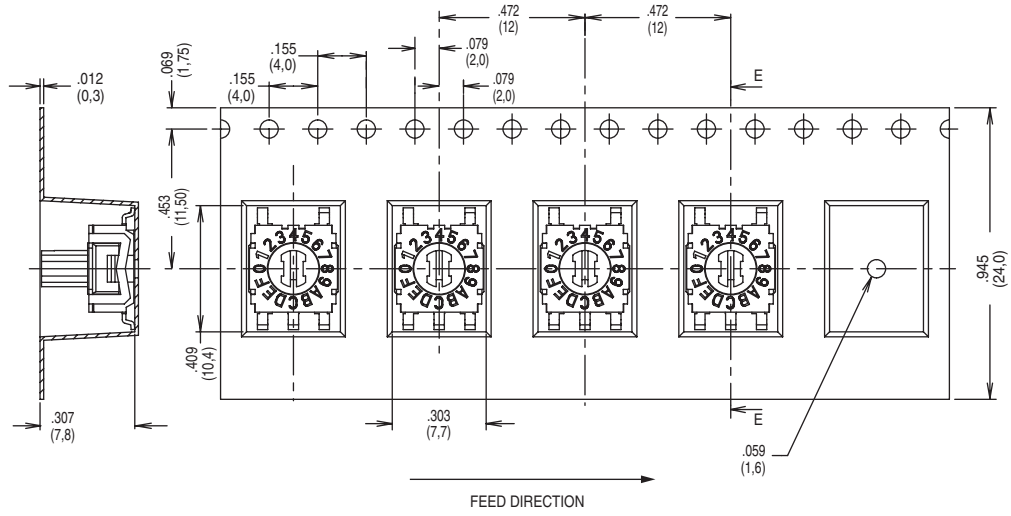

Tape and reel for RTExx00Gxx
1,250 pieces per reel.

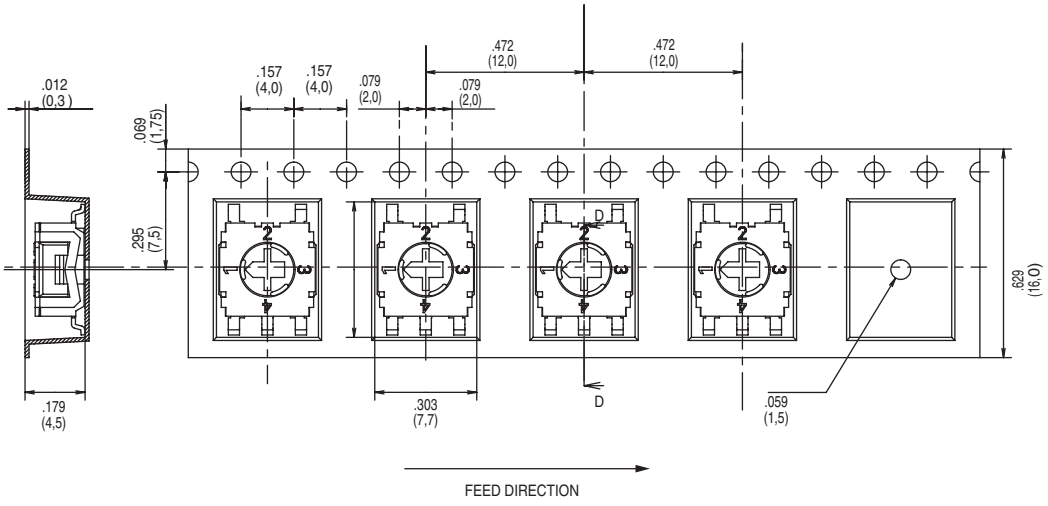

First Angle Projection

Dimensions are shown: Inch (mm)
Specifications and dimensions subject to change