PT65 series

Rotary code switches



DISTINCTIVE FEATURES

4 actuator types
Sub-miniature size
Solder and flux sealed, washable



ENVIRONMENTAL SPECIFICATIONS

- Operating temperature: -20 °C to +70 °C (-4 °F to +167 °F)

ELECTRICAL SPECIFICATIONS

- Operating voltage : ≤ 42 V
- Contact load, static : ≤ 0.2 A
- Contact load, dynamic : ≤ 0.15 A
- Initial contact resistance : 80 mΩ max.
- Insulation resistance : 100 MΩ min.

MECHANICAL SPECIFICATIONS

- Torque : 0.7 Ncm min
- Expected life : 10,000 cycles min.

MATERIALS

- Base : UL94-V0, high temperature thermoplastic
- Cover : UL94-V0, high temperature thermoplastic
- Actuator : PA 4.6 nylon
- Contacts : gold over nickel plated phosphor bronze
- Terminals : tin plated

The company reserves the right to change specifications without notice.

PT65 series

Rotary code switches

SOLDERING

- DIN CEI 68-2-20
- Manual soldering : 340 °C (644 °F) max. for 2 seconds max.
- Wave soldering : 280 °C (536 °F) max. for 5 seconds max.

PACKAGING

- Switches for screwdriver slot or accessory actuation (PT651 and PT657) : tubes of 50 pieces
- Switches with spindle (PT653) or segment wheel (PT655) : trays of 50 pieces
- Accessories : bags of 50 pieces

PCB MOUNTING

PCB STRAIGHT

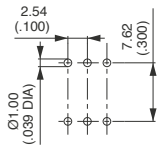

PCB RIGHT ANGLE 2.54

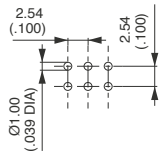

PCB RIGHT ANGLE 5.08

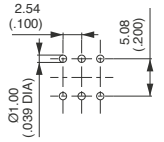

PT65 series

Rotary code switches

BUILD YOUR PART NUMBER

PT65			
SERIES	ACTUATORS	CODES	TERMINALS

ACTUATORS

1	Screwdriver
3	Spindle
5	Segment wheel
7	Accessories

CODES

01	BCD
02	BCD complement
03	Hexadecimal
06	Hexadecimal complement

TERMINALS

(none)	Straight
L254	Right angle, spacing 2.54 (.100)
L508	Right angle, spacing 5.08 (.200)

AVAILABLE AS STANDARD PRODUCTS						
	SCREWDRIVER		SPINDLE	SEGMENT WHEEL		ACCESSORIES
	Upper actuation	Side actuation	Upper actuation	Upper actuation	Side actuation	Upper actuation
BCD	PT65101	PT65101L254 PT65101L508	PT65301	PT65501	-	PT65701
BCD COMPLEMENT	PT65102	-	-	PT65502	-	-
HEXADECIMAL	PT65103	PT65103L254 PT65103L508	PT65303	PT65503	PT65303L254	-
HEXADECIMAL COMPLEMENT	PT65106	-	-	-	-	-

SCREWDRIVER SLOT - STRAIGHT TERMINALS



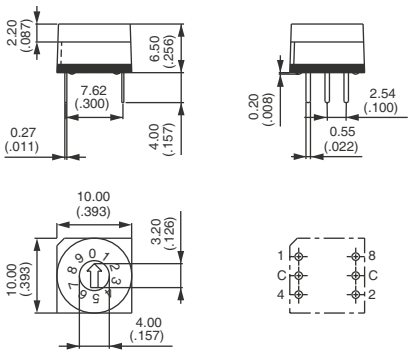

PT65 series

Rotary code switches

ACTUATORS

PT65



1 Screwdriver
3 Spindle (grey)
8 Segment wheel (grey)
7 Accessories (see next page)

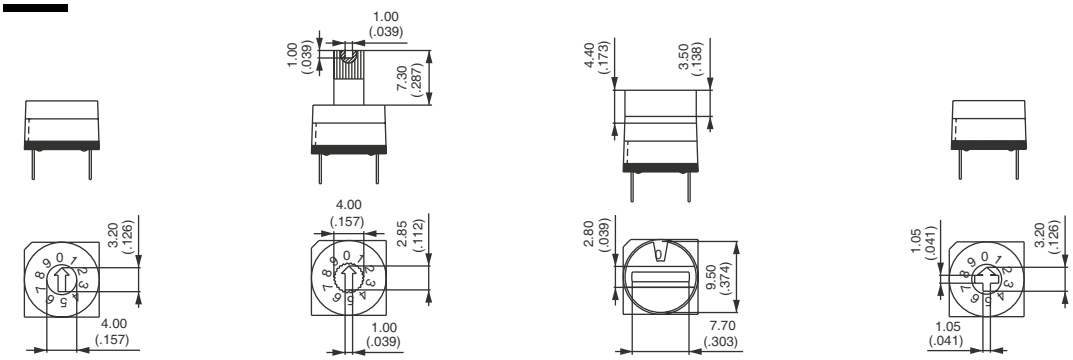

1 3 5 7

CODES

PT65

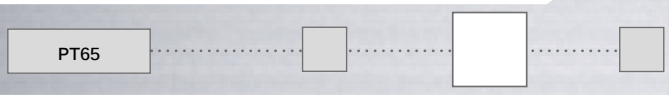

01 BCD
02 BCD complement
03 Hexadecimal
06 Hexadecimal complement

POSITION / MARKING

	C	1	2	4	8	
0	●					0
1	●	●				1
2	●		●			2
3	●	●	●			3
4	●			●		4
5	●	●		●		5
6	●		●	●		6
7	●	●	●	●		7
8	●				●	8
9	●	●			●	9

01

POSITION / MARKING

	C	1	2	4	8	
0	●	●	●	●	●	0
1	●		●	●	●	1
2	●	●		●	●	2
3	●			●	●	3
4	●	●	●		●	4
5	●		●		●	5
6	●	●			●	6
7	●				●	7
8	●	●	●	●		8
9	●		●	●		9

02

POSITION / MARKING

	C	1	2	4	8	
0	●					0
1	●	●				1
2	●		●			2
3	●	●	●			3
4	●			●		4
5	●	●		●		5
6	●		●	●		6
7	●	●	●	●		7
8	●				●	8
9	●	●			●	9
10	●		●		●	10
11	●	●	●		●	11
12	●			●	●	12
13	●	●		●	●	13
14	●		●	●	●	14
15	●	●	●	●	●	15

03

POSITION / MARKING

	C	1	2	4	8	
0	●	●	●	●	●	0
1	●		●	●	●	1
2	●	●		●	●	2
3	●			●	●	3
4	●	●	●		●	4
5	●		●		●	5
6	●	●			●	6
7	●				●	7
8	●	●	●	●		8
9	●		●	●		9
10	●	●		●		10
11	●			●		11
12	●	●	●			12
13	●		●			13
14	●	●				14
15	●					15

06

PT65 series

Rotary code switches

TERMINALS

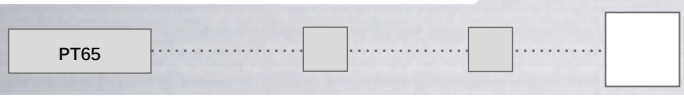

(none) Straight
L254 Right angle, spacing 2.54 (.100)
L508 Right angle, spacing 5.08 (.200)

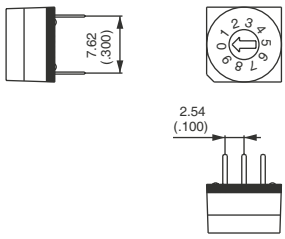

(none)

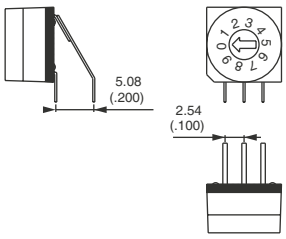

L254

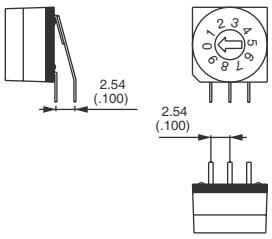

L508

ACCESSORIES

To order separately.

ACCESSORIES ADAPTED TO YOUR APPLICATIONS
Basic model PT657 has been designed to accept different actuators with snap-in connection.
According to your application, you can choose between spindles or plastic knobs in two different lengths and a Ø 17 mm (.669) knurled wheel for lateral marking.
Standard colours are shown below. Special colours are also available on request.

		P/N	COLORS	DIMENSIONS
SPINDLES	Length 11.6 mm (standard)	U4822	black	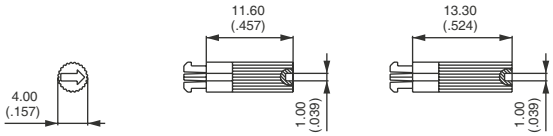
		U4824	grey	
	Length 13.3 mm	U4832	black	
PLASTIC KNOBS	Length 5.3 mm (standard)	U4906	red	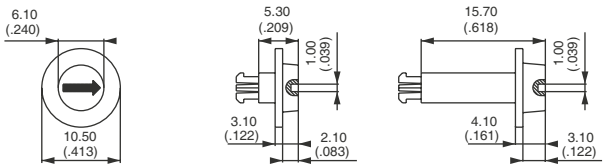
	Length 15.7 mm	U4916	red	
	Length 4.4 mm	U4941	blue	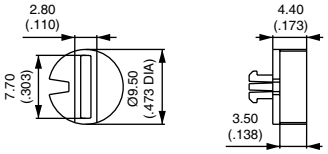
		U4943	green	
		U4944	grey	
		U4945	yellow	
		U4946	red	
KNURLED WHEEL (unmarked - marking on request)		U4847/1	white/black	