E20061

Fibre optic through-beam sensor

FE-00-P-V-E1

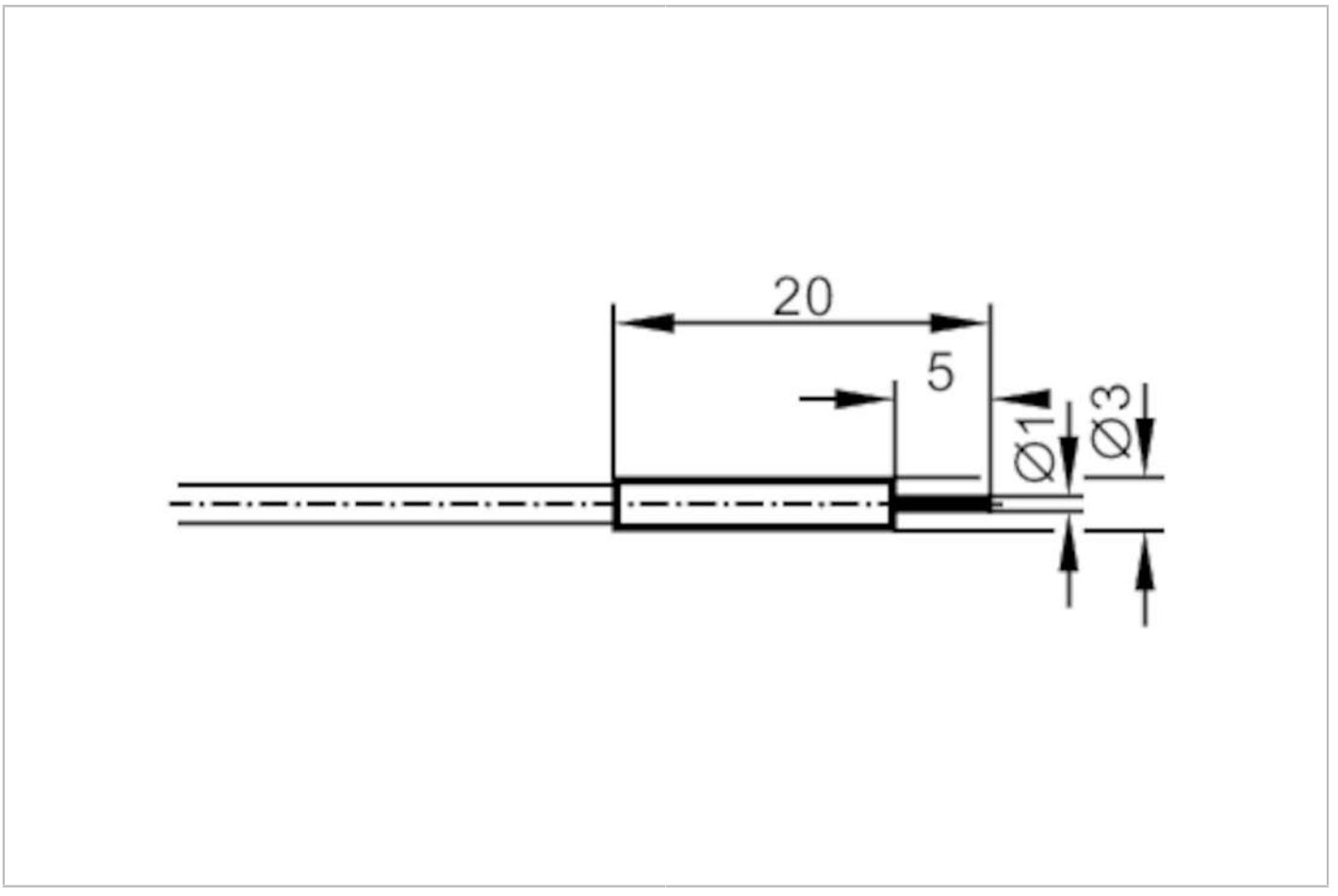

Application		
Function principle		Through-beam sensor
Application		Small bending radius
Detection zone		
Range with fibre-optic amplifier type		OCF; OKF; OOF; OUF
OCF (High Power)		
Range of fibre optics	[mm]	420
OKF		
Range of fibre optics	[mm]	50
OOF		
Range of fibre optics	[mm]	160
OUF		
Range of fibre optics	[mm]	50
Operating conditions		
Ambient temperature	[°C]	-20...80
Mechanical data		
Weight	[g]	49
Version of sensing head		straight
Sensing head diameter	[mm]	1

E20061

Fibre optic through-beam sensor

FE-00-P-V-E1

Sensing head length	[mm]	5
Total length	[mm]	600
Min. bending radius	[mm]	10
Fibre arrangement		◉
Materials		Adapter: PPE
Fibre material		glass
Fibre head material		stainless steel (1.4305 / 303)
Fibre sheath material		PVC
Accessories		
Items supplied		Mounting clamp:, E20107
Remarks		
Pack quantity		1 pcs.