BF18T2L048

FOUR-POLE CONTACTOR, IEC OPERATING CURRENT ITH (AC1) = 32A, DC COIL LOW CONSUMPTION, 48VDC, 2NO AND 2NC



Product designation			Power contactor
Product type designation			BF18
Contact characteristics			
Number of poles		Nr.	4
Rated insulation voltage Ui IEC/EN		V	690
Rated impulse withstand voltage Uimp		kV	6
Operational frequency			
	min	Hz	25
	max	Hz	400
IEC Conventional free air thermal current Ith		A	32
Operational current Ie			
	AC-1 (≤40°C)	A	32
	AC-1 (≤55°C)	A	26
	AC-1 (≤70°C)	A	23
	AC-3 (≤440V ≤55°C)	A	18
	AC-4 (400V)	A	8.5
Rated operational power AC-1 (T≤40°C)			
	230V	kW	12
	400V	kW	21
	500V	kW	26
	690V	kW	36
Short-time allowable current for 10s (IEC/EN60947-1)		A	200
Protection fuse			
	gG (IEC)	A	32
	aM (IEC)	A	20
Making capacity (RMS value)		A	180
Breaking capacity at voltage			
	440V	A	144
	500V	A	120
	690V	A	94
Resistance per pole (average value)		mΩ	2.5
Power dissipation per pole (average value)			
	Ith	W	2.6
	AC3	W	0.8
Tightening torque for terminals			
	min	Nm	1.5
	max	Nm	1.8
	min	Ibin	1.1
	max	Ibin	1.5
Tightening torque for coil terminal			
	min	Nm	0.8
	max	Nm	1
	min	Ibin	0.8
	max	Ibin	0.74
Max number of wires simultaneously connectable		Nr.	2

The characteristics described in this document are subject to updates or modifications at any time. The descriptions, technical and functional information, illustrations and instructions in this brochure are purely illustrative, and are consequently not contractually binding

Conductor section				
	AWG/Kcmil			
		max		10
	Flexible w/o lug conductor section			
		min	mm²	1
		max	mm²	6
	Flexible c/w lug conductor section			
		min	mm²	1
		max	mm²	4
	Flexible with insulated spade lug conductor section			
		min	mm²	1
		max	mm²	4
Power terminal protection according to IEC/EN 60529				IP20 when properly wired
Mechanical features				
Operating position				
		normal		Vertical plan
		allowable		±30°
Fixing				Screw / DIN rail 35mm
Weight			g	500
Conductor section				
	AWG/kcmil conductor section			
		max		10
Operations				
Mechanical life			cycles	20000000
Electrical life			cycles	1600000
Safety related data				
Performance level B10d according to EN/ISO 13489-1				
		rated load	cycles	1600000
		mechanical load	cycles	20000000
Mirror contats according to IEC/EN 609474-4-1				YES
EMC compatibility				yes
AC coil operating				
AC operating voltage				
	of 50/60Hz coil powered at 50Hz			
	drop-out			
		max	%Us	55
DC coil operating				
DC rated control voltage			V	48
DC operating voltage				
	pick-up			
		min	%Us	80
		max	%Us	110
	drop-out			
		min	%Us	10
		max	%Us	40
Average coil consumption ≤20°C				
		in-rush	W	2.4
		holding	W	2.4
Max cycles frequency				
Mechanical operation			cycles/h	3600
Operating times				

The characteristics described in this document are subject to updates or modifications at any time. The descriptions, technical and functional information, illustrations and instructions in this brochure are purely illustrative, and are consequently not contractually binding

Average time for Us control				
	in AC			
		Closing NO		
			min	ms 8
			max	ms 24
		Opening NO		
			min	ms 10
			max	ms 20
		Closing NC		
			min	ms 14
			max	ms 28
		Opening NC		
			min	ms 7
			max	ms 18
	in DC			
		Closing NO		
			min	ms 75
			max	ms 91
		Opening NO		
			min	ms 15
			max	ms 19
		Closing NC		
			min	ms 24
			max	ms 30
		Opening NC		
			min	ms 67
			max	ms 81
UL technical data				
Full-load current (FLA) for three-phase AC motor				
			at 480V	A 14
			at 600V	A 17
Yielded mechanical performance				
	for single-phase AC motor			
			110/120V	HP 1
			230V	HP 3
	for three-phase AC motor			
			200/208V	HP 5
			220/230V	HP 5
			460/480V	HP 10
			575/600V	HP 15
General USE				
	Contactor			
			AC current	A 32
Ambient conditions				
Temperature				
	Operating temperature			
			min	°C -50
			max	°C 70
	Storage temperature			
			min	°C -60
			max	°C 80
Max altitude				m 3000
Resistance & Protection				
Pollution degree				3

The characteristics described in this document are subject to updates or modifications at any time. The descriptions, technical and functional information, illustrations and instructions in this brochure are purely illustrative, and are consequently not contractually binding

Dimensions

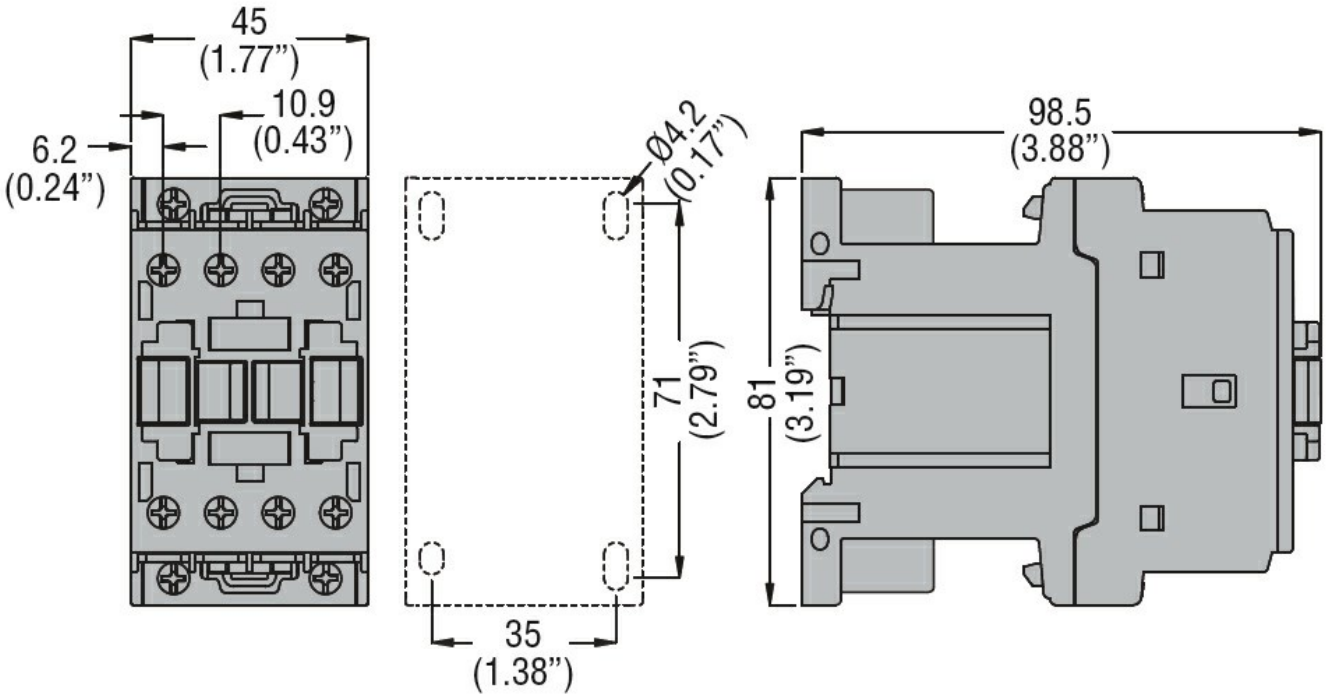

Wiring diagrams

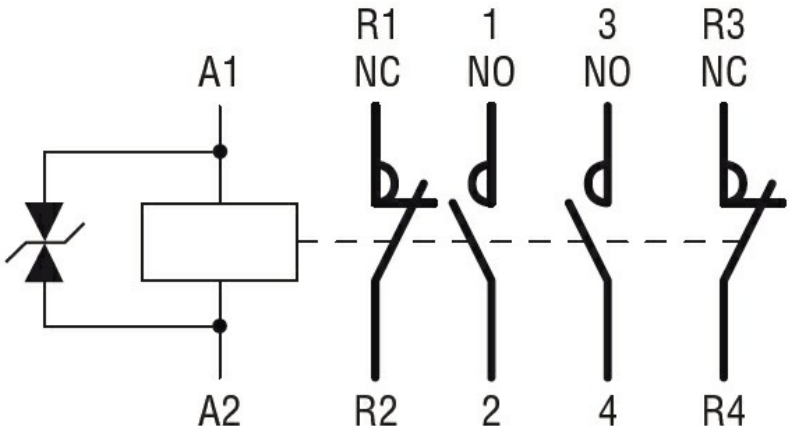

Certifications and compliance

Compliance

CSA C22.2 n° 60947-1
CSA C22.2 n° 60947-4-1
IEC/EN/BS 60947-1
IEC/EN/BS 60947-4-1
UL 60947-1
UL 60947-4-1

Certificates

CCC
cULus
EAC

ETIM classification

ETIM 8.0	EC000066 - Power contactor, AC switching

The characteristics described in this document are subject to updates or modifications at any time. The descriptions, technical and functional information, illustrations and instructions in this brochure are purely illustrative, and are consequently not contractually binding