OG5119

Diffuse reflection sensor with background suppression

OGH-FPKG/V4A/US-100

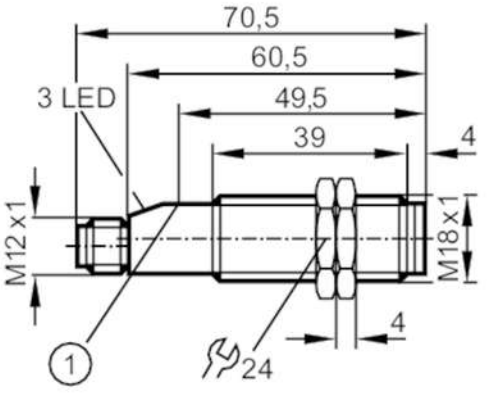

1 pushbutton

Product characteristics		
Type of light		red light
Housing		threaded type
Application		
Special feature		Gold-plated contacts; Background suppression
Function principle		Diffuse reflection sensor
Electrical data		
Operating voltage	[V]	10...36 DC
Current consumption	[mA]	< 40
Protection class		II
Reverse polarity protection		yes
Type of light		red light
Wave length	[nm]	660
Outputs		
Electrical design		PNP
Output function		light-on/dark-on mode; (programmable)
Max. voltage drop switching output DC	[V]	2.5
Permanent current rating of switching output DC	[mA]	150; (200 (...60 °C))
Switching frequency DC	[Hz]	250
Short-circuit protection		yes
Type of short-circuit protection		pulsed
Overload protection		yes
Detection zone		
Range	[mm]	30...130; (white paper 200 x 200 mm 90% remission)
Range adjustable		yes
Max. light spot diameter	[mm]	12
Light spot dimensions refer to		at maximum range

OG5119

Diffuse reflection sensor with background suppression

OGH-FPKG/V4A/US-100

Background suppression available		yes	
Operating conditions			
Ambient temperature	[°C]	-20...80	
Protection		IP 68; IP 69K	
Tests / approvals			
EMC		EN 60947-5-2	
		EN 55011	class B
MTTF	[years]	521	
Mechanical data			
Weight	[g]	65.3	
Housing		threaded type	
Dimensions	[mm]	M18 x 1 / L = 70.5	
Thread designation		M18 x 1	
Materials		stainless steel (1.4404 / 316L); PBT	
Lens material		PMMA	
Displays / operating elements			
Display		switching status	1 x LED, yellow
		operation	1 x LED, green
		function	1 x LED, red
Accessories			
Items supplied		lock nuts: 2	
Remarks			
Remarks		operating voltage "supply class 2" according to cULus	
Pack quantity		1 pcs.	

Electrical connection

Connector: 1 x M12; coding: A; Contacts: gold-plated

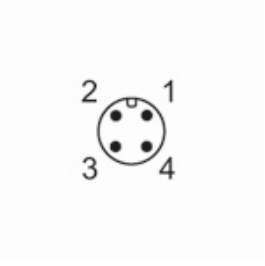

OG5119

Diffuse reflection sensor with background suppression

OGH-FPKG/V4A/US-100

Connection



Diagrams and graphs

accuracy graph

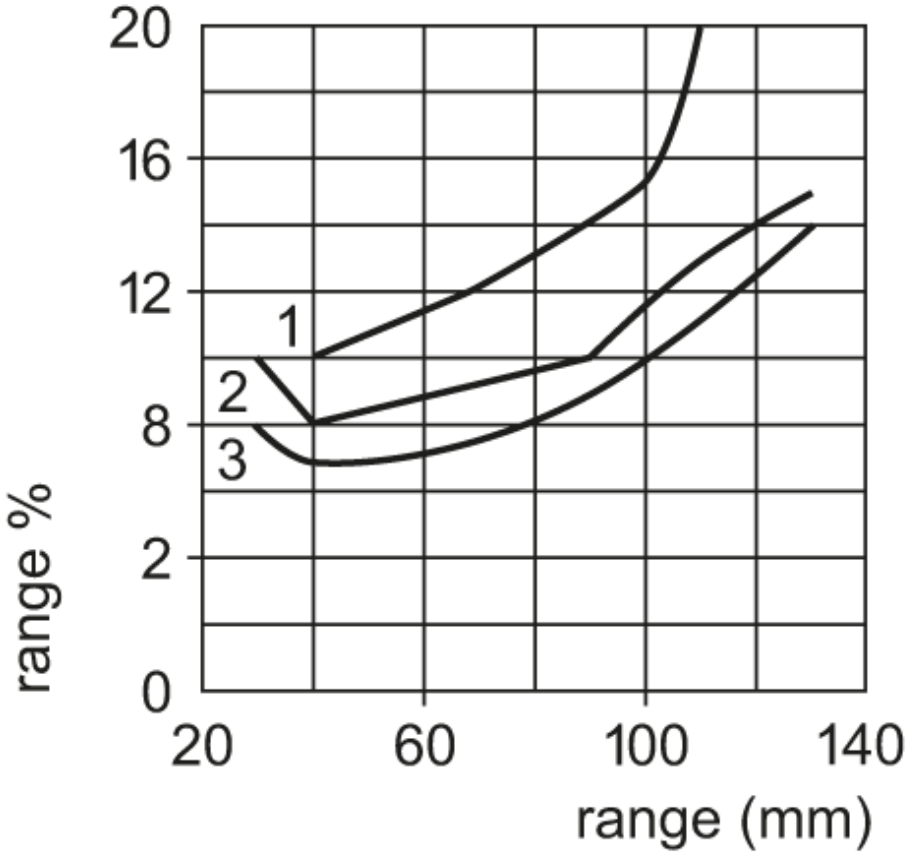

x: distance sensor/object [mm]

y: min. distance object/background [mm]

1 = object black (6 % remission) , background white (90 % remission)

2 = object grey (18 % remission) , background white (90 % remission)

3 = object white (90 % remission) , background white (90 % remission)

Note : range % = setting in % of the range