BF80T4E230

FOUR-POLE CONTACTOR, IEC OPERATING CURRENT ITH (AC1) = 115A, AC/DC COIL, 230VAC/DC



Product designation			Power contactor
Product type designation			BF80
Contact characteristics			
Number of poles		Nr.	4
Rated insulation voltage Ui IEC/EN		V	1000
Rated impulse withstand voltage Uimp		kV	8
Operational frequency			
	min	Hz	25
	max	Hz	400
IEC Conventional free air thermal current Ith		A	115
Operational current Ie			
	AC-1 (≤40°C)	A	115
	AC-1 (≤55°C)	A	95
	AC-1 (≤70°C)	A	80
	AC-3 (≤440V ≤55°C)	A	80
	AC-4 (400V)	A	38
Rated operational power AC-1 (T≤40°C)			
	230V	kW	43
	400V	kW	76
	500V	kW	95
	690V	kW	120
IEC max current Ie in DC1 with L/R ≤ 1ms with 1 poles in series			
	≤24V	A	70
	48V	A	60
	75V	A	60
	110V	A	8
	220V	A	–
IEC max current Ie in DC1 with L/R ≤ 1ms with 2 poles in series			
	≤24V	A	100
	48V	A	100
	75V	A	100
	110V	A	80
	220V	A	9
IEC max current Ie in DC1 with L/R ≤ 1ms with 3 poles in series			
	≤24V	A	100
	48V	A	100
	75V	A	100
	110V	A	85
	220V	A	95
IEC max current Ie in DC1 with L/R ≤ 1ms with 4 poles in series			
	≤24V	A	100
	48V	A	100
	75V	A	100
	110V	A	100
	220V	A	115

The characteristics described in this document are subject to updates or modifications at any time. The descriptions, technical and functional information, illustrations and instructions in this brochure are purely illustrative, and are consequently not contractually binding

IEC max current Ie in DC3-DC5 with L/R ≤ 15ms with 1 poles in series			
	≤24V	A	40
	48V	A	30
	75V	A	30
	110V	A	3
	220V	A	–
IEC max current Ie in DC3-DC5 with L/R ≤ 15ms with 2 poles in series			
	≤24V	A	60
	48V	A	50
	75V	A	50
	110V	A	40
	220V	A	5
IEC max current Ie in DC3-DC5 with L/R ≤ 15ms with 3 poles in series			
	≤24V	A	80
	48V	A	70
	75V	A	70
	110V	A	60
	220V	A	64
IEC max current Ie in DC3-DC5 with L/R ≤ 15ms with 4 poles in series			
	≤24V	A	90
	48V	A	90
	75V	A	90
	110V	A	75
	220V	A	80
Short-time allowable current for 10s (IEC/EN60947-1)		A	640
Protection fuse			
	gG (IEC)	A	125
	aM (IEC)	A	80
Making capacity (RMS value)		A	800
Breaking capacity at voltage			
	440V	A	640
	500V	A	625
	690V	A	456
Resistance per pole (average value)		mΩ	0.6
Power dissipation per pole (average value)			
	Ith	W	7.9
	AC3	W	3.8
Tightening torque for terminals			
	min	Nm	4
	max	Nm	5
	min	lbin	2.95
	max	lbin	3.69
Tightening torque for coil terminal			
	min	Nm	0.8
	max	Nm	1
	min	lbin	0.59
	max	lbin	0.74
Max number of wires simultaneously connectable		Nr.	2
Conductor section			
AWG/Kcmil			
	max		2
Flexible w/o lug conductor section			
	min	mm²	1.5

The characteristics described in this document are subject to updates or modifications at any time. The descriptions, technical and functional information, illustrations and instructions in this brochure are purely illustrative, and are consequently not contractually binding

		max	mm²	35
	Flexible c/w lug conductor section			
		min	mm²	1.5
		max	mm²	35
Power terminal protection according to IEC/EN 60529				IP20 front
Mechanical features				
Operating position				
		normal		Vertical plan
		allowable		±30°
Fixing				Screw / DIN rail 35mm
Weight			g	1280
Conductor section				
	AWG/kcmil conductor section			
		max		2
Operations				
Mechanical life			cycles	15000000
Electrical life			cycles	1300000
Safety related data				
Performance level B10d according to EN/ISO 13489-1				
		rated load	cycles	1300000
		mechanical load	cycles	15000000
Mirror contats according to IEC/EN 609474-4-1				yes
EMC compatibility				yes
AC coil operating				
Rated AC voltage at 50/60Hz, 60Hz				
		min	V	100
		max	V	250
Rated AC voltage at 50/60Hz			V	230
AC operating voltage				
	of 50/60Hz coil powered at 50Hz			
	pick-up			
		min	%Us	80 Us min
		max	%Us	110 Us max
	drop-out			
		max	%Us	≤70 Us min
	of 50/60Hz coil powered at 60Hz			
	pick-up			
		min	%Us	80 Us min
		max	%Us	110 Us max
	drop-out			
		max	%Us	≤70 Us min
AC average coil consumption at 20°C				
	of 50/60Hz coil powered at 50Hz			
		in-rush	VA	35…120
		holding	VA	1.5…3.7
	of 50/60Hz coil powered at 60Hz			
		in-rush	VA	35…120
		holding	VA	1.5…3.7
	of 60Hz coil powered at 60Hz			
		in-rush	VA	210
		holding	VA	15
Dissipation at holding ≤20°C 50Hz			W	1…2.5

The characteristics described in this document are subject to updates or modifications at any time. The descriptions, technical and functional information, illustrations and instructions in this brochure are purely illustrative, and are consequently not contractually binding

DC coil operating					
DC rated control voltage					
			min	V	100
			max	V	250
DC rated control voltage				V	230
DC operating voltage					
	pick-up				
			min	%Us	80 Us min
			max	%Us	110 Us max
	drop-out				
			max	%Us	≤70 Us min
Average coil consumption ≤20°C					
			in-rush	W	23…68
			holding	W	1.2…1.9
Max cycles frequency					
Mechanical operation				cycles/h	1500
Operating times					
Average time for Us control					
	in AC				
		Closing NO			
			min	ms	40
			max	ms	85
		Opening NO			
			min	ms	20
			max	ms	55
	in DC				
		Closing NO			
			min	ms	40
			max	ms	85
		Opening NO			
			min	ms	20
			max	ms	55
UL technical data					
Full-load current (FLA) for three-phase AC motor					
			at 480V	A	77
			at 600V	A	77
Yielded mechanical performance					
	for three-phase AC motor				
			200/208V	HP	25
			220/230V	HP	30
			460/480V	HP	60
			575/600V	HP	75
General USE					
	Contactor				
			AC current	A	115
Short-circuit protection fuse, 600V					
	High fault				
			Short circuit current	kA	100
			Fuse rating	A	200
			Fuse class		J
	Standard fault				
			Short circuit current	kA	10
			Fuse rating	A	200
			Fuse class		RK5

The characteristics described in this document are subject to updates or modifications at any time. The descriptions, technical and functional information, illustrations and instructions in this brochure are purely illustrative, and are consequently not contractually binding

BF80T4E230

FOUR-POLE CONTACTOR, IEC OPERATING CURRENT ITH (AC1) = 115A, AC/DC COIL, 230VAC/DC

Ambient conditions

Temperature				
	Operating temperature			
		min	°C	-40
		max	°C	70
	Storage temperature			
		min	°C	-50
		max	°C	80
Max altitude			m	3000

Resistance & Protection

Pollution degree	3

Dimensions

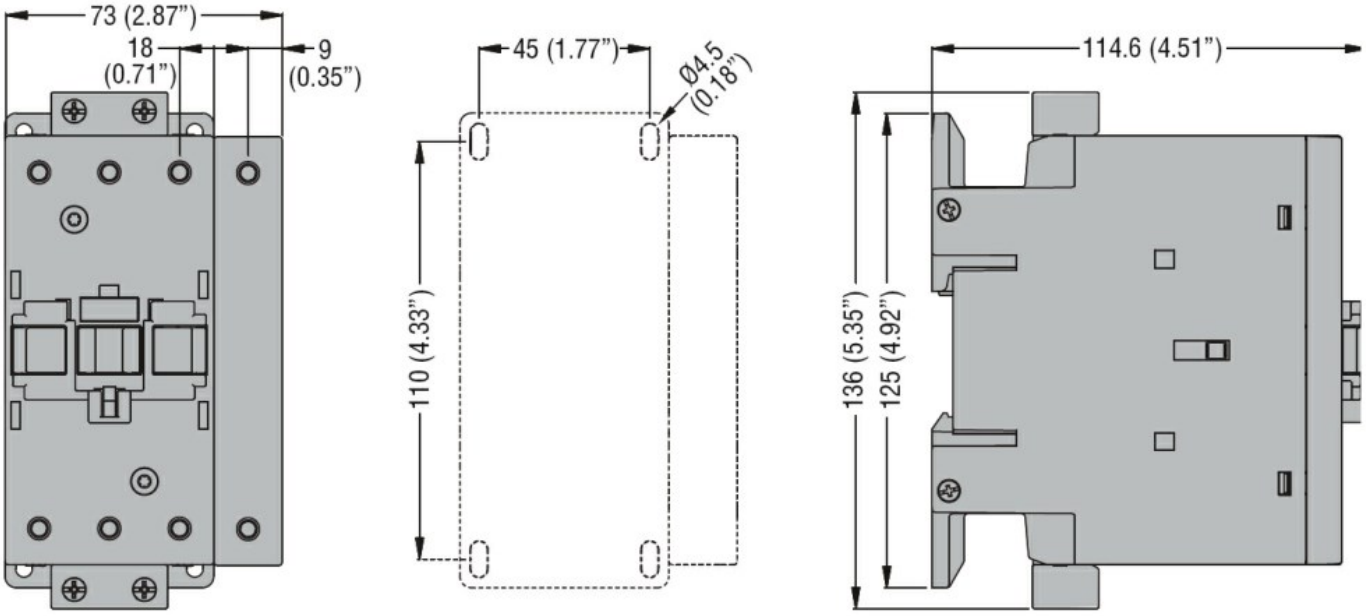

Wiring diagrams

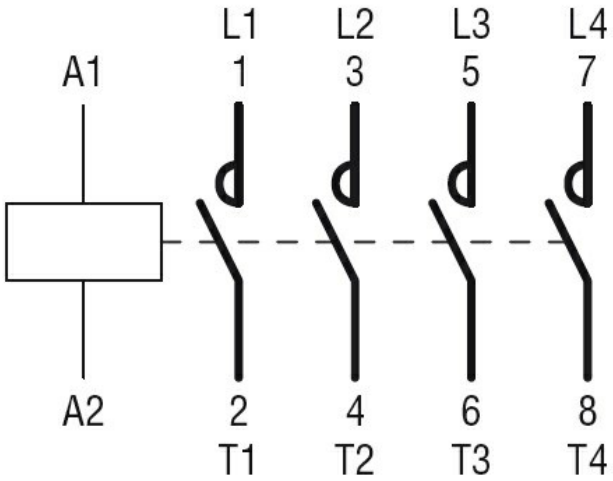

Certifications and compliance

Compliance

CSA C22.2 n° 60947-1
CSA C22.2 n° 60947-4-1
IEC/EN/BS 60947-1
IEC/EN/BS 60947-4-1
UL 60947-1

The characteristics described in this document are subject to updates or modifications at any time. The descriptions, technical and functional information, illustrations and instructions in this brochure are purely illustrative, and are consequently not contractually binding

	UL 60947-4-1
Certificates	
	CCC
	cULus

ETIM classification

ETIM 8.0	EC000066 - Power contactor, AC switching

The characteristics described in this document are subject to updates or modifications at any time. The descriptions, technical and functional information, illustrations and instructions in this brochure are purely illustrative, and are consequently not contractually binding