CONFIGURATION GUIDE

Enclosure Solutions

Rack Cabinets, Accessories, and Rackmount Kits



KEYSIGHT TECHNOLOGIES

Table of Contents

Rack Solutions for Keysight Systems 5
Keysight Rack Features 5
Keysight Rack Value 6
Load a Rack in Less Time 6
Rack Systems Fast and Easily 7
Use Vertical Space Efficiently 7
Manage Power Requirements 7
Protect from Heat Buildup 7
Secure Instruments During Test 7
Move Racks Easily 7
Enhance Stability 8
Improve Cable Management 8
Rack Chracteristics and Specifications 9
Power Distribution Units 11
E7590A Configurations 12
Included with the E7590A 13
E3661B and E3662B Configurations 14
Included with the E3661B and E3662B 15
Multi-Bay System Configurations 16
Multi-bay System Tie Kits 17
Rack Ordering Information 17
Rack Accessories 18
Rear Doors 18
Rear Door Characteristics and Specifications 19
Extractor Fans 19
Drawers 20
Drawer Characteristics and Specifications 21
Stationary Shelf 21
Stationary Shelf Characteristics and Specifications 22
Sliding Shelf 23
Sliding Shelf Characteristics and Specifications 23
Work Surface 24
Work Surface Characteristics and Specifications 24
Ballast 24
Ballast Characteristics and Specifications 25

Rack Accesories Ordering Information 25
Keyboard and Mouse Rack Mount Kits 26
Retractable Keyboard Kit 26
Retractable Keyboard Kit Characteristics and Specifications 26
Fixed Keyboard Kit 27
Fixed Keyboard Kit Characteristics and Specifications 27
Keyboard Rackmount Kit Ordering Information 27
Instrument Rackmount Kits 28
Instrument Compatibility with Racks 28
Mounting Other Instruments 29
Handles and Rackmount Flange Kits 29
Front Handle Kit 30
Rackmount Flange Kits 31
Flange Kits with Handles 31
Rackmount Flange Kit for Instruments with Previously Supplied Handles 32
Selecting a Rackmount Flange or Handle Kit 32
Rackmount Adapter Kits 33
Selecting a Rackmount Adapter Kit 34
Rackmount Accessories 35
Support Shelf 35
Support Shelf Characteristics and Specifications 35
Lock Link Kits and Locking Feet Kits 36
Rail and Slide Kits 37
Slide Kits 38
End Brackets 39
Rack Filler Panels 39
IEC-320 Female-Male Power Cables 40
Rackmount Accessory Ordering Information 40
Testmobiles and Accessories 41
Testmobile Benefits 41
Add mobility to your instruments 41
Bring the equipment to the test 41
Share expensive instruments 41
Protect your investment 41
Use instruments with ease 41
Testmobile Key Features 42
Testmobile Cart Selection Criteria 42

Testmobile Scope Cart, 1180CZ 42
Testmobile System Cart, 1181BZ 43
Testmobile Characteristics and Specifications 44
Enhance Instrument Output 45
Testmobile Work Surface 45
Testmobile Work Surface Characteristics and Specifications 45
Testmobile Printer/Plotter Stand 46
Testmobile Printer/Plotter Stand Characteristics and Specifications 46
Testmobile Accessories Selection Chart 47
Conclusion 47

Rack Solutions for Keysight Systems

Keysight Technologies offers 19-inch EIA (Electronics Industries Association) rack cabinets tailored to meet the needs of test and measurement instrumentation customers. Rack mounting is fast and easy with unique design features. A selection of options and accessories provides flexibility to meet the requirements of most racking applications**.**

Keysight Rack Features

- Vented top and rear door (with lock)
- Solid base
- Leveling screws
- Retractable anti-tip foot
- 4 Concealed lifting hooks. Each hook can support 227 kg (500 lbs)
- One Keysight System II rail kit, including a pair of rails
- 3-Inch heavy duty casters
- Power distribution Unit (PDU) – must specify 110 V or 220 V
- Easy to remove side panels



Figure 1. The E3661B (32 EIA), E7590A (25 EIA), E3662B (41 EIA) standard rack cabinets

Keysight Rack Value

Keysight racks have been designed and engineered to save you time and money

- Limited assembly required: Keysight ships racks fully assembled and ready for equipment installation saving time and money. Accessories can be ordered and will be shipped ready to be integrated onto the rack. (see Figure 1).
- Fast startup: Designed for easy unloading from the pallet.
- Pallet re-use: Racks are sent out with double pallets, as well as a ramp. Racks can be integrated on the pallet, which adds a convenient system for integrating the rack. The pallet has been tested up to 1000 pounds and can also be used to ship an integrated system.
- Unique column and rail design: Equipment installation time is cut in half because of Keysight's unique column and support rail design. Our special cutouts in the columns, spaced at EIA intervals and rail hooks assure instruments are mounted easily in the right place
- Designed for Keysight Instruments: Keysight racks are specifically designed for Keysight's test and measurement equipment, virtually ensuring a perfect fit. They will also accommodate non-Keysight equipment making them suitable for a mixed instrument environment.

Load a Rack in Less Time

The design of Keysight support rails can cut in half the time required to install equipment in a rack. The rails hang on discrete slots on the vertical mounting columns, corresponding to each EIA unit in the rack. Vertical adjustment between instruments is minimized by selecting the proper rail. Rails are available for Keysight System II instruments and for flat bottom instrument chassis (see page 36). The system was specifically designed to minimize the time required to install instruments.

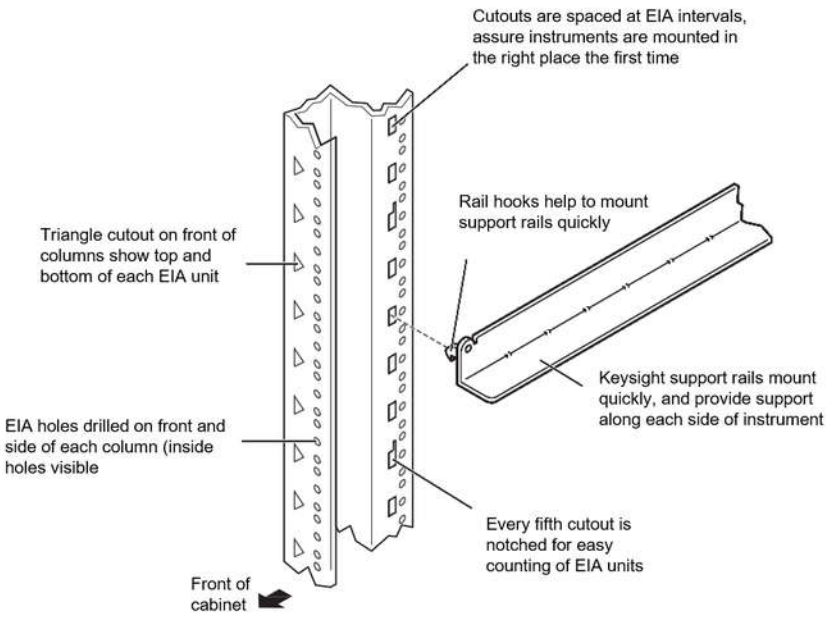

Figure 2. Keysight Column and Rail Design

Rack Systems Fast and Easily

Racks are shipped with all basic materials assembled. No time is lost preparing a rack with basic assembly. Accessories, kits and supplementary small parts are shipped separately, as ordered, and are ready for immediate configuration.

More than just a way of storing instruments, the racks reflect Keysight's reputation for quality and design. A sturdy frame provides structural integrity, which allows lightweight, easy-to-lift off side panels that allow for installation and easy access to equipment and cables. Rails are placed into keyed slots in the vertical columns, resulting in quick and accurate positioning.

Use Vertical Space Efficiently

Vertical space within a rack is measured in industry-standard EIA units, where 1 EIA unit = 1.75 inches (44.5 mm). Equipment height is also specified in EIA units. System configuration is made easier by counting EIA units from the base of the rack. A seamless fit of instrument and rail is ensured.

Manage Power Requirements

A power management system must be ordered. Option AW3 (110 V) or option AW5 (220 V). It is vertically mounted behind the rack rear column and supplies power to the cabinet. An illuminated master switch, which is conveniently located on the front of the rack, provides easy access to turn the power on and off to the Power Distribution Unit (PDU) outlets.

To completely remove power from the PDU and the rack system, the PDU power cord needs to be removed electrical system, or if the rack system is connected to a dedicated circuit breaker, the breaker needs to be opened.

Protect from Heat Buildup

It is important for racks to efficiently dispose of heat. Instruments increasingly generate more heat, and in a compact rack mounted system the heat buildup can be detrimental to the system. System-generated heat is removed by natural convection through a ventilation path incorporated in the roof of the racks. The vented rear door also helps reduce the heat captured within the rack. For greater heat dissipation, an optional top-mounted extractor fan is available. (see page 18)

Secure Instruments During Test

Both the rear door and the optional Plexiglas front door can be locked to secure against disruption of tests or unauthorized removal of system components. The symmetrical rear door design allows it to be mounted for opening to either left or right, useful for multi-bay configurations.

Move Racks Easily

Each rack is provided with four 3-inch diameter, smooth-rolling, heavy-duty casters to facilitate moving racks over short distances. Four lifting hooks conveniently concealed in the top of the rack allow for transport, even when fully loaded. Each hook can support 227 kg (500 lbs) to easily handle the maximum recommended gross weight for a loaded rack of 816 kg (1800 lbs).

Enhance Stability

An optional front mounted retractable anti-tip stabilizer that can be extended into place with ease is standard on all racks. It provides temporary anti-tip capability for slide mounted products when they are in their extended position.

Improve Cable Management

Keysight racks have an additional 100 mm of internal space that is available at the rear of the rack. This convenient space is available for the installation of power distribution units (PDUs) and cables, which are routed out the bottom of the rack.

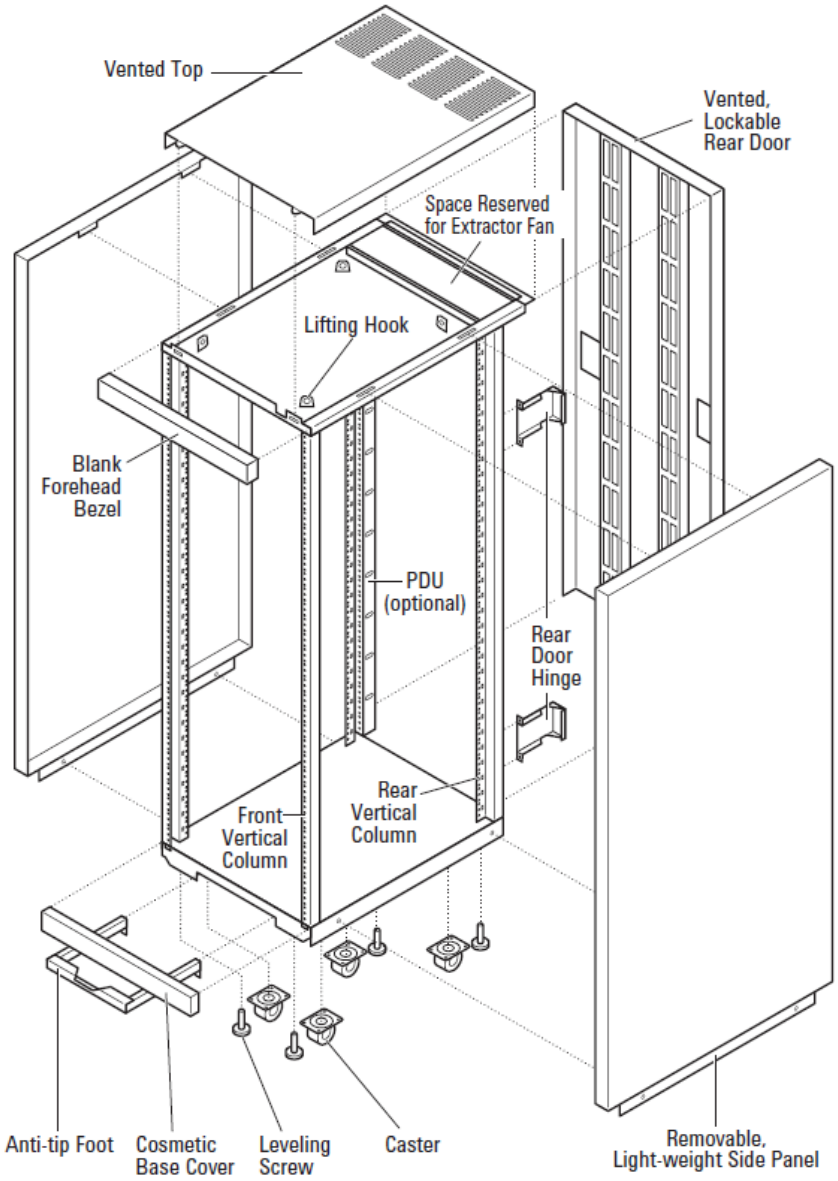

Figure 3. Exploded view of standard rack.

Rack Chracteristics and Specifications

General Characteristics	
Casters rating	318 kg (700 lbs) each, 816 kg (1800 lbs) total Casters have a point contact convex cross section
Lift hook rating	227 kg (500 lbs) each Total system and cabinet weight is a maximum 816 kg (1800 lbs), static. Lift cabinet using all four (4) hooks.
Rack material	Frame/columns: 13 Ga. cold rolled steel. Side Panels: 18 Ga. cold rolled steel.

Exterior Rack Dimensions				
Model	**Dim1**	**Height**	**Width**	**Depth**
E7590A	A	1320 mm (51.9 in)	600 mm (23.6 in)	905 mm (35.6 in)
	C	120.8 mm (4.8 in)		
E3661B	A	1620 mm (63.8 in)	600 mm (23.6 in)	905 mm (35.6 in)
	C	131.8 mm (5.2)		
E3662B	A	2020 mm (79.5 in)	600 mm (23.6 in)	905 mm (35.6 in)
	C	131.8 mm (5.2 in)		

Interior Rack Dimensions					
Model	**Dim1**	**Height**	**Width**	**Depth**	**EIA Rack units**
E7590A	B	1111.25 mm (43.8 in)	450.8 mm (17.8 in)	851 mm (33.5 in)	25
E3661B	B	1422.5 mm (56.0 in)	450.8 mm (17.8 in)	851 mm (33.5 in)	32
E3662B	B	1822.5 mm (71.8 in)	450.8 mm (17.8 in)	851 mm (33.5 in)	41

[1] See Figure 4.

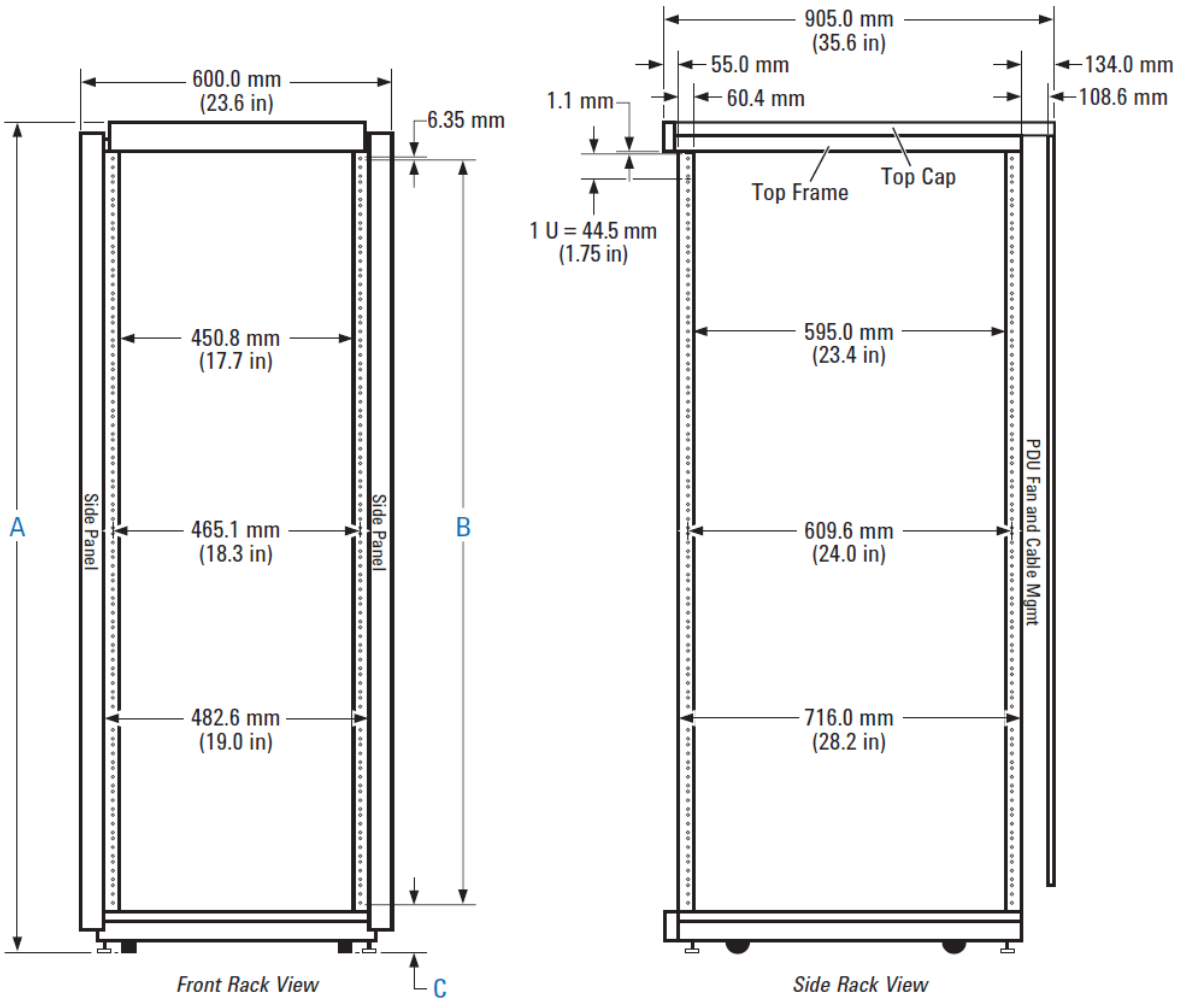

Figure 4. Rack dimensions

Rack Weight and Load Ratings		
Model	**Weight**	**Load capacity**
E7590A	89 kg (196 lbs) empty	816 kg (1800 lbs)
E3661B	100 kg (221 lbs) empty	816 kg (1800 lbs)
E3662B	116 kg (255 lbs) empty	816 kg (1800 lbs)

Power Distribution Units

Factory installed PDUs are available in a 100-120 V North American configuration (AW3) or a 200-240 V International configuration (AW5). The power distribution unit conveniently supplies power to equipment mounted in the rack.

PDUs mount vertically behind the rear column and do not reduce the mounting space in the rack. Factory installation includes the specified PDU and a lighted, low-voltage power switch mounted in the rack's forehead bezel.

A lighted master power switch (Figure 6) is supplied with the PDU. The switch controls a relay in 1 or 2 PDUs. The system's power can be conveniently switched on and off using the master switch. The switch also provides rapid system shutdown in case of emergency. Supplemental circuit breakers are provided on both hot (live) and neutral lines.

Rack Configuration Hint

You must specify a PDU option. See pages 12 and 14 for PDU details.

- All PDUs are single phase.
- A maximum of two PDUs can be installed in one rack.
- The top receptacle of all PDUs is configured as IEC-320 and is intended for the extractor fan. It can be used for other purposes if no fan is installed.
- Keysight offers various power cords. See the power cord selection to select the power cord that is appropriate for your location and rack solution.



Figure 5. Power distribution units



Figure 6. Low voltage safety switch

E7590A Configurations

Solid side panels and a lockable vented rear door are standard equipment on the Keysight E7590A (1.3 m, 25 EIA Units) rack cabinet. To provide better value and save integration time, choose a variety of power distribution unit (PDU) options. Choose the PDU option you want, and your rack will arrive fully assembled and ready for use.



Figure 7. E7590A 1.3 m Rack

E7590A Factory Installed PDU Options		
PDUs include Forehead bezel with lighted switch, supplemental circuit breakers, IEC-320 upper receptacle for fan or other use.		 IEC 320 C13
North American PDU (option AW3) – Meets UL/CSA standards		
Voltage	100-120 V, 15 A	
Receptacles	1 IEC-320 C-13 and 5 NEMA 5-15R	 IEC 320 C13  NEMA 5-15R
Power cord	2 m cord with 5-20P non-locking plug	 5-20 P non-locking
International PDU (option AW5) - Meets IEC-950 and VDE Standards		
Voltage	200-240 V, 15 A	
Receptacles	6 IEC-320 C-13	 IEC 320 C13
Power cord	2 m cord with no plug (user installs plug)	

Included with the E7590A

- Rack cabinet (assembled with vented, lockable rear door
- 2 removable side panels, vented top, solid base)
- Leveling screws Retractable anti-tip foot
- Four, 3-inch heavy duty casters
- One set of Keysight instrument rails
- Factory installed PDU (110 V option AW3 or 220 V option AW5)
- Forehead bezel with lighted safety switch

E3661B and E3662B Configurations

The Keysight E3661B (1.6 m, 32 EIA Units) and E3662B (2.0 m, 41 EIA Units) rack cabinets have a variety of options. Each rack is delivered fully assembled and ready to use. Each rack comes with sides, vented rear door, and one PDU (either 110 V or 220 V).

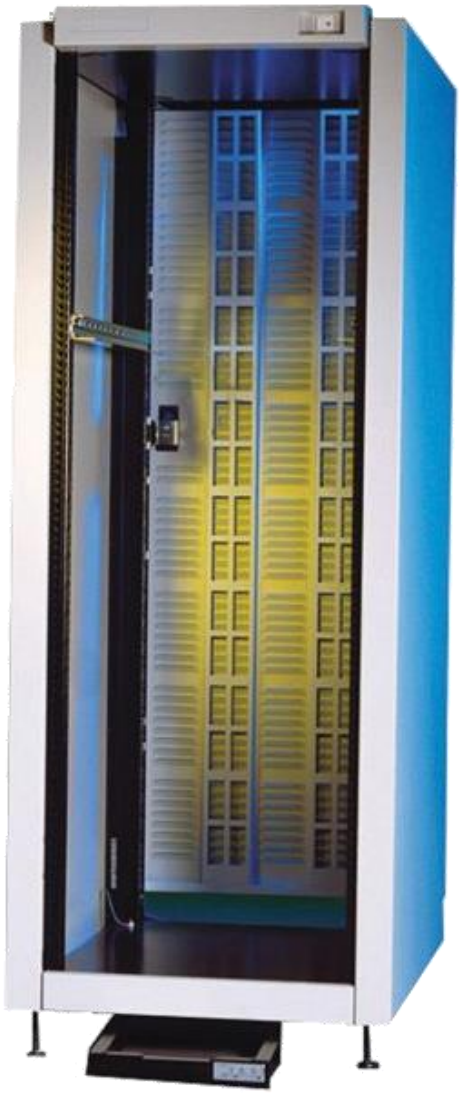

Figure 8. E3661B 1.6 m Rack

Rack Configuration Hint

1.6M and 2 m racks come with vented rear doors. Solid doors are available, see page 17 for details.

E3661B and E3662B Factory Installed PDU Options		
PDUs include Forehead bezel with lighted switch, supplemental circuit breakers, IEC-320 upper receptacle for fan or other use.		 IEC 320 C13
North American PDU (option AW3) – Meets UL/CSA standards		
Voltage	100-120 V, 15A	
Receptacles	1 IEC-320 C-13 and 9 NEMA 5-15R	 IEC 320 C13  NEMA 5-15R
Power cord	2 m cord with 5-20P non-locking plug	 5-20 P non-locking
International PDU (option AW5) – Meets IEC-950 and VDE Standards		
Voltage	200-240 V, 15 A	
Receptacles	10 IEC-320 C-13 and 1 IEC-320 C19	 IEC 320 C13 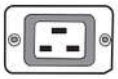 IEC-320 C19
Power cord	2 m cord with no plug (user installs plug)	

Included with the E3661B and E3662B

- Rack cabinet (assembled with vented, lockable rear door, 2 removable side panels, vented top, solid base)
- Leveling screws Retractable anti-tip foot
- Four, 3-inch heavy duty casters
- One set of Keysight instrument rails
- Factory installed PDU (110 V option AW3 or 220 V option AW5)
- Forehead bezel with lighted safety switch

Multi-Bay System Configurations

Keysight tie kits allow you to create multi- bay solutions. These kits connect rack columns and provide clearance for front and rear door operation. Start by filling in the configuration guide (left) and then select the kits for your application.

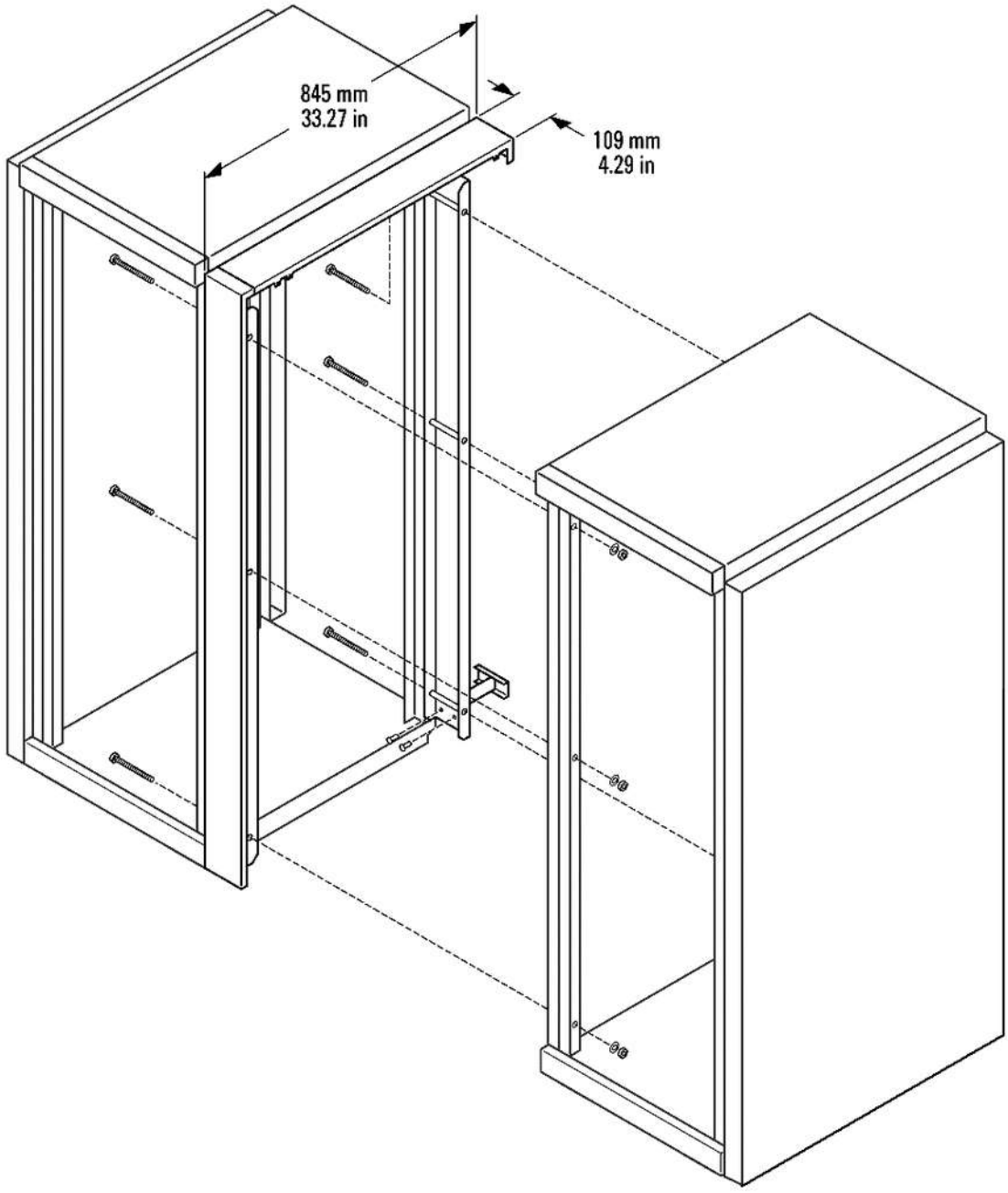

Figure 9. Double-bay configuration

Multi-bay System Tie Kits

Tie kits include cosmetic panels which connect and finish the front, rear and top of adjacent racks. Order one kit for each pair of racks to be joined.



Figure 10. Tie kit for each pair of racks to be joined

Rack Ordering Information

Rack model	Description
E7590A	1.3 m Rack Cabinet, 25 EIA units - For Americas orders only
E7590AA	1.3 m Rack Cabinet, 25 EIA units - For orders In Asia, Japan, and Australia
E7590AE	1.3 m Rack Cabinet, 25 EIA units - For European orders only
E3661B	1.6 m Rack Cabinet, 32 EIA units - For Americas Orders Only
E3661BA	1.6 m Rack Cabinet, 32 EIA units - For orders In Asia, Japan, and Australia
E3661BE	1.6 m Rack Cabinet, 32 EIA units - For European orders only
E3662B	2.0 m Rack Cabinet, 41 EIA units - For Americas orders only
E3662BA	2.0 m Rack Cabinet, 41 EIA units - For orders In Asia, Japan, and Australia
E3662BE	2.0 m Rack Cabinet, 41 EIA units - For European orders only
Must Order PDU Option	**Description**
Option AW1[2]	Rack with NO doors, NO side panels, NO PDU. Quartz gray.
Option AW3	100-120 Volts North America PDU; includes rear door and side panel
Option AW5	200-240 Volts International PDU; includes rear door and side panel
Accessories	
E4468BZ	1.6 m Tie Kit
E7792AZ	2.0 m Tie Kit
E7685AZ	PDU Installation Kit w/Bezel
E4451-67000[3]	1.3 m PDU 100-120 V
E4453-67000[3]	1.3 m PDU 200-240 V
E4455-67000[3]	1.6 m and 2.0M PDU 100-120 V
E4457-67000[3]	1.6 m and 2.0M PDU 200-240 V

[2] If option AW1 is ordered, accessories such as doors and PDUs must be ordered and installed separately.
[3] E7685AZ PDU Install Kit is required for mounting a PDU in a bare rack.

Rack Accessories

Rear Doors

Standard racks include vented rear doors which can be replaced with a solid door.

Features of the rear door kit include:

- Doors can be installed to hinge on either the left or right side for maximum flexibility.
- Easy customer installation.
- All necessary mounting hardware.
- Lockable for access security.

Mounting hardware is included with the rear door. However, you may also purchase a separate rear door hinge if desired (see p/n C2786-00012C).

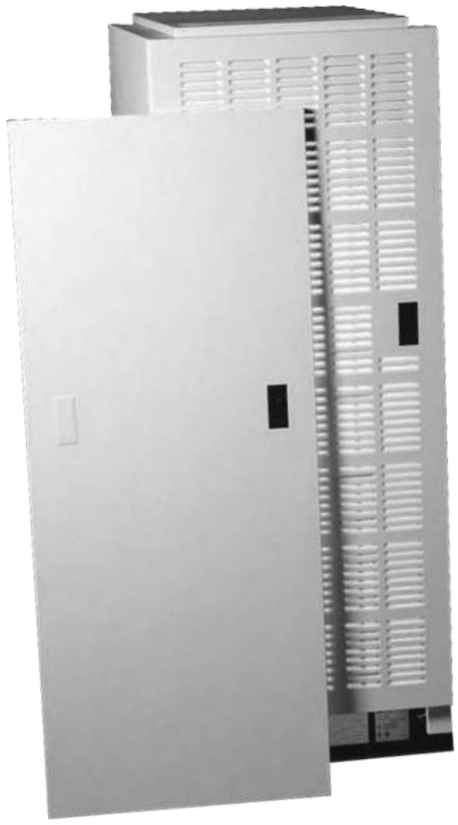

Figure 11. Solid and vented rear doors (E4476-67000, E4477-67000)

Rear Door Characteristics and Specifications

Characteristic	E4476-67000	E4478-67000	E4477-67000	E4479-67000
Type	Non-vented	Non-vented	Vented	Vented
Material	Cold-rolled steel	Cold-rolled steel	Cold-rolled steel	Cold-rolled steel
Weight	15.4 kg (34 lbs)	21.3 kg (47 lbs)	14.1 kg (31 lbs)	20 kg (44 lbs)
Color	Quartz gray	Quartz gray	Quartz gray	Quartz gray
Height	1425.6 mm (57.2 in)	1852.7 mm (72.9 in)	1425.6 mm (57.2 in)	1852.7 mm (72.9 in)
Width	599 mm (23.6 in)	599 mm (23.6 in)	599 mm (23.6 in)	599 mm (23.6 in)
EIA Units	32	41	32	41

Extractor Fans

Extractor fans are used to increase air flow through the rack cabinet. Keysight's fan improves natural convection cooling by increasing the airflow in the rack. Use of the fan enhances the movement of warm air from the bottom of the rack up and out through the vented top cap, providing cooling to the entire length of the rack. The customer installable extractor fan mounts easily under the top cap into the top frame of the rack. It moves air at 342 cubic meters per hour (200 cubic feet per minute). The fan does not reduce the space available for rack mounting instruments.

- Fans are highly recommended for racks with a front door.
- One fan per rack.
- Select an appropriate fan that fits your local AC voltage.
- Fans plug into the upper IEC 320 outlet on PDU.

Rack Configuration Hint

Use extractor fans when rack internal temperatures are 15 °C (27 °F) above ambient.



Figure 12. Rack extractor fans

Extractor Fans Characteristics and Specifications

Extractor Fan Characteristics		Extractor Fan Dimensions
Airflow	200 cfm	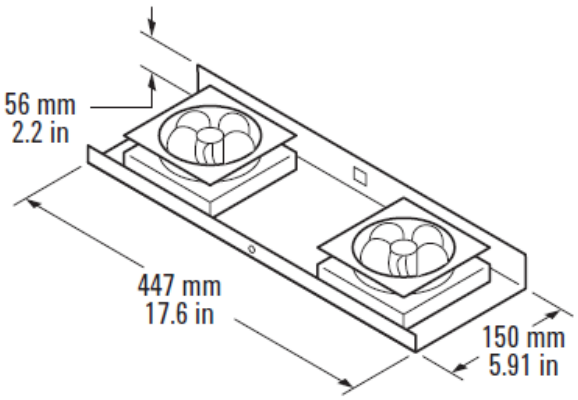
Acoustic noise	43 dB	
AC input (50-60 Hz)	E4470AZ: 100/120 V E4471AZ: 200/240 V	
AC current	1 A maximum	
Material	Cold-rolled steel	
Weight	3.6 kg (8 lbs)	
Color	Quartz gray	

Drawers

Mount a drawer in the rack to keep manuals or spare cables close to where they are needed. Two drawer sizes are available. Sliding rails and mounting hardware are included.





Figure 13. Drawer accessory

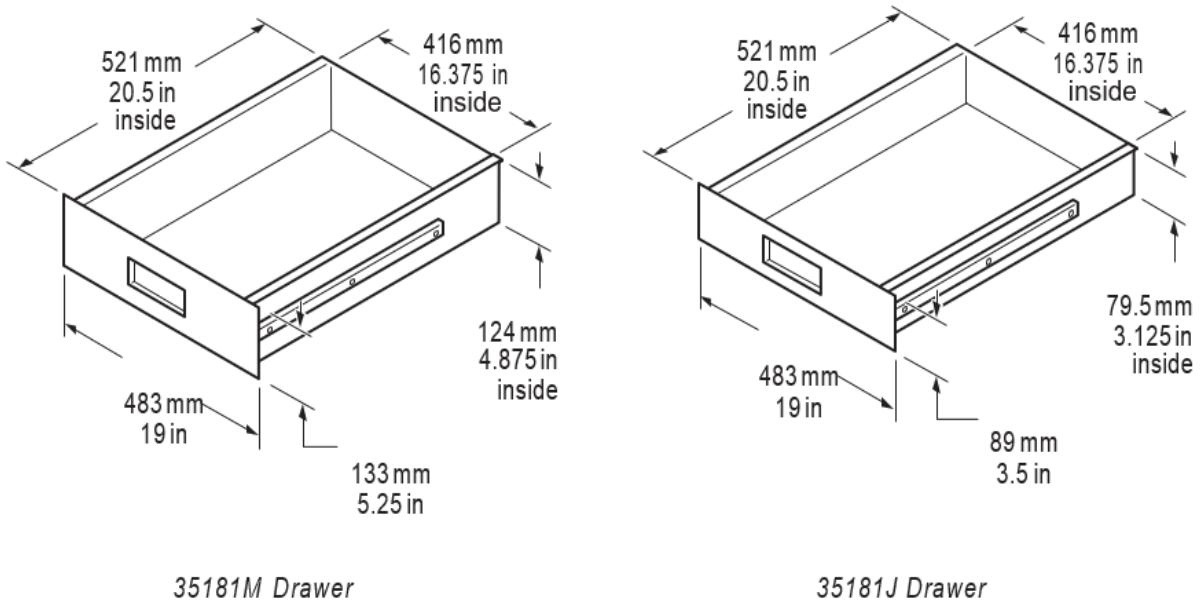

Figure 14. Drawer dimensions

Drawer characteristics	35181J	35181M
Material	Cold-rolled steel	Cold-rolled steel
Weight	7.26 kg (16 lbs)	8.16 kg (18 lbs)
Color	Quartz gray	Quartz gray
EIA Units	2	3

Stationary Shelf

The stationary shelf can be used in all standard Keysight racks. The stationary shelf is mounted securely into place using the supplied hardware and is designed to sit at the bottom of the EIA increment.

Features of the stationary shelf include:

- Snap-in design for easy installation
- Smooth edges

Rack Configuration Hint

Use a stationary shelf when equipment does not have a rack mount kit.



Figure 15. J1520AC Stationary Shelf

Stationary Shelf Characteristics and Specifications

J1520AC Shelf Characteristics	
Material	Cold-rolled steel
Weight	8 kg (17.6 lbs)
Color	Quartz gray
EIA units	1
Load capacity	68 kg (150 lbs)
Length	733 mm (28.86 in)
Height	44 mm (1.73 in)
Width	482.6 mm (19 in)
Inside width	441 mm (17.375 in)

Sliding Shelf

The sliding shelf provides a flat surface with full product accessibility. It can be used in all Keysight racks to support equipment that may not have its own rackmount kit. The shelf and slides are preassembled for easy installation.

Features of the sliding shelf include:

- Snap-in design for easy installation
- Smooth edges

Consider purchasing the steel ballast (C2790AC) to use with the sliding shelf. The ballast provides anti-tip capability when the shelf is extended.



Figure 16. J1526AC sliding shelf



Figure 17. Sliding shelf installed in a rack

Sliding Shelf Characteristics and Specifications

J1526AC Shelf Characteristics	
Material	Cold-rolled steel
Weight	9.9 kg (22 lbs)
Color	Quartz gray
EIA Units	2
Load capacity	68 kg (150 lbs)
Length	674 mm (26.55 in)
Height	44.5 mm (1.75 in)
Width	482.6 mm (19 in)
Inside Width	413 mm (16.25 in)

Work Surface

The work surface is stationary and is designed to remain securely in place. The work surface provides a convenient work shelf utility area at the front of the rack. It can be used as a writing space or to hold accessories.

Consider purchasing the steel ballast (C2790AC) to use with the work surface. The ballast provides anti-tip capability.



Figure 18. 46298SZ work surface

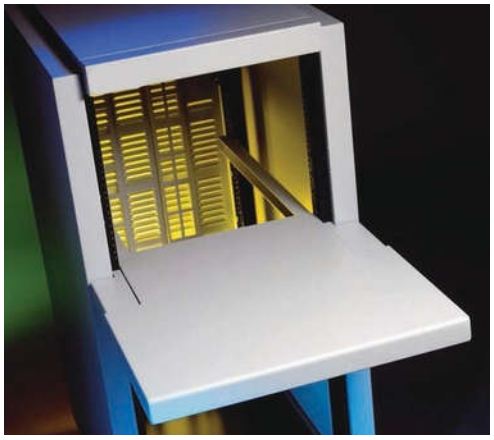

Figure 19. Work surface installed in a rack

Work Surface Characteristics and Specifications

46298SZ Work Surface Characteristics		Work Surface Dimensions
Material	Cold-rolled steel	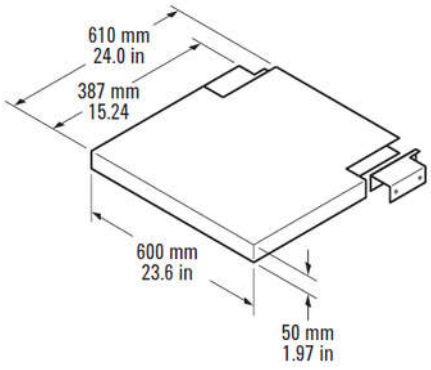
Weight	12.7 kg (28 lbs)	
Color	Quartz gray	
EIA units	2	
Load capacity	22.7 kg (50 lbs)	

Ballast

The ballast kit includes a 30-pound weight to provide anti-tip protection. Ballast deters the cabinet from tipping forward if heavy slide-mounted devices are extended from the rack.

Keysight rack cabinets include a standard, pull-out anti-tip foot that can be extended temporarily for servicing. Ballast provides an extra margin of safety to counteract the extra weight incurred when an accessory extends from the rack, such as a work surface.

Ballast features:

- Each ballast kit contains a 30 lb. ballast and mounting hardware.
- The ballast mounts on the rear columns of the rack and provides a counterweight for equipment that extends out from the front of the rack.

Ballast should be employed when using the following rack accessories:

- Slide mounted instruments
- Work surface
- Monitor
- Keyboard

Rack Configuration Hint

Always mount ballast in the rear of the rack. Racks should not be shipped with ballast installed.

Ballast Characteristics and Specifications

C2790AC Ballast Characteristics		Ballast Dimensions
Material	Cold-rolled steel	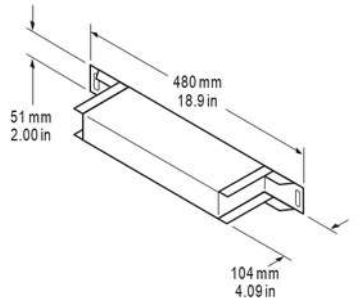
Weight	13.6 kg (30 lb)	
Color	Quartz gray	

Rack Accesories Ordering Information

Accessories	
E4476-67000	Solid rear door for 1.6 m rack
E4477-67000	Vented rear door for 1.6 m rack
E4478-67000	Solid rear door for 2.0 m rack
E4479-67000	Vented rear door for 2.0 m rack
C2786-00012C	Rear door hinge
E4470AZ	Extractor fan 100-120 Volt
E4471AZ	Extractor fan 200-220 Volt
35181J	Storage drawer, 3.5”
35181M	Storage drawer, 5.25”
J1520AC	Stationary Shelf
J1526AC	Siding Shelf
46298SZ	Work Surface
C2790AC	Ballast, 30 lb steel, fits all rack heights

Keyboard and Mouse Rack Mount Kits

Select a fixed or retractable keyboard and mouse kit appropriate for you needs (keyboard and mouse not included). Consider purchasing the ballast kit for added stability (C2790AC).

Retractable Keyboard Kit

Keysight's compact shelving kit provides a convenient enclosed keyboard system that requires minimum rack space, saving valuable space for your instruments.

The kit can accommodate any standard keyboard and mouse. The retractable keyboard shelf slides into the rack when not in use. When retracted, the shelf does not extend from the rack. Keyboard security is available by using a front door on the rack cabinet. The keyboard kit includes all mounting hardware.



Figure 20. Retractable keyboard kit



Figure 21. Keyboard when retracted

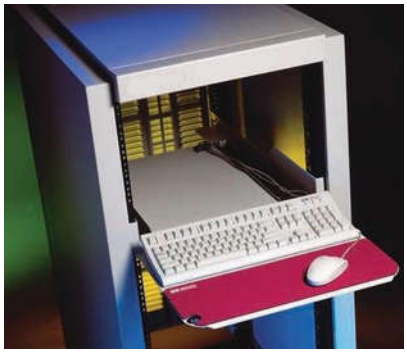

Figure 22. Extended keyboard

Retractable Keyboard Kit Characteristics and Specifications

J1518AC Retractable Keyboard Characteristics		Retractable Keyboard Dimensions
Material	Cold-rolled steel	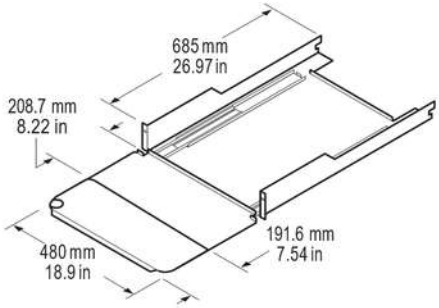
Weight	12.9 kg (28.5 lbs)	
Color	Quartz gray	
EIA Units	2	

Fixed Keyboard Kit

The keyboard kit includes all mounting hardware. In an environment where the keyboard is not required to retract, a fixed keyboard shelf is available. The fixed keyboard shelf mounts on the outside of the front rack columns.

Rack Configuration Hint

The fixed keyboard cannot be used with a front door installed on the rack.



Figure 23. Fixed keyboard rackmount kit



Figure 24. Fixed keyboard mounted in a rack

Fixed Keyboard Kit Characteristics and Specifications

E7714AC Fixed Keyboard Characteristics		Fixed Keyboard Dimensions
Material	Cold-rolled steel	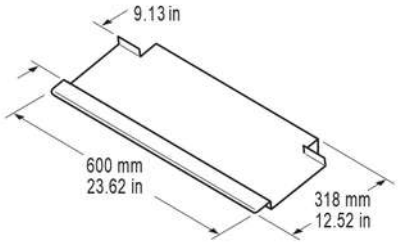
Color	Quartz gray	
EIA Units	1	

Keyboard Rackmount Kit Ordering Information

Accessories	
J1518AC	Retractable keyboard kit, fits all racks
E7714AC	Fixed keyboard kit, fits all racks

Instrument Rackmount Kits

Instrument Compatibility with Racks

Keysight's modular cabinet system offers bench-stacking and rack-mounting versatility. These cabinets are designed for compatibility with EIA and IEC standards, both in width and height. Modular cabinets are currently defined as System II instruments and are available in standard sizes. As shown in Figure 25, instrument depths have 5 sizes and instrument heights have 6 sizes. They are measured in millimeters and inches.

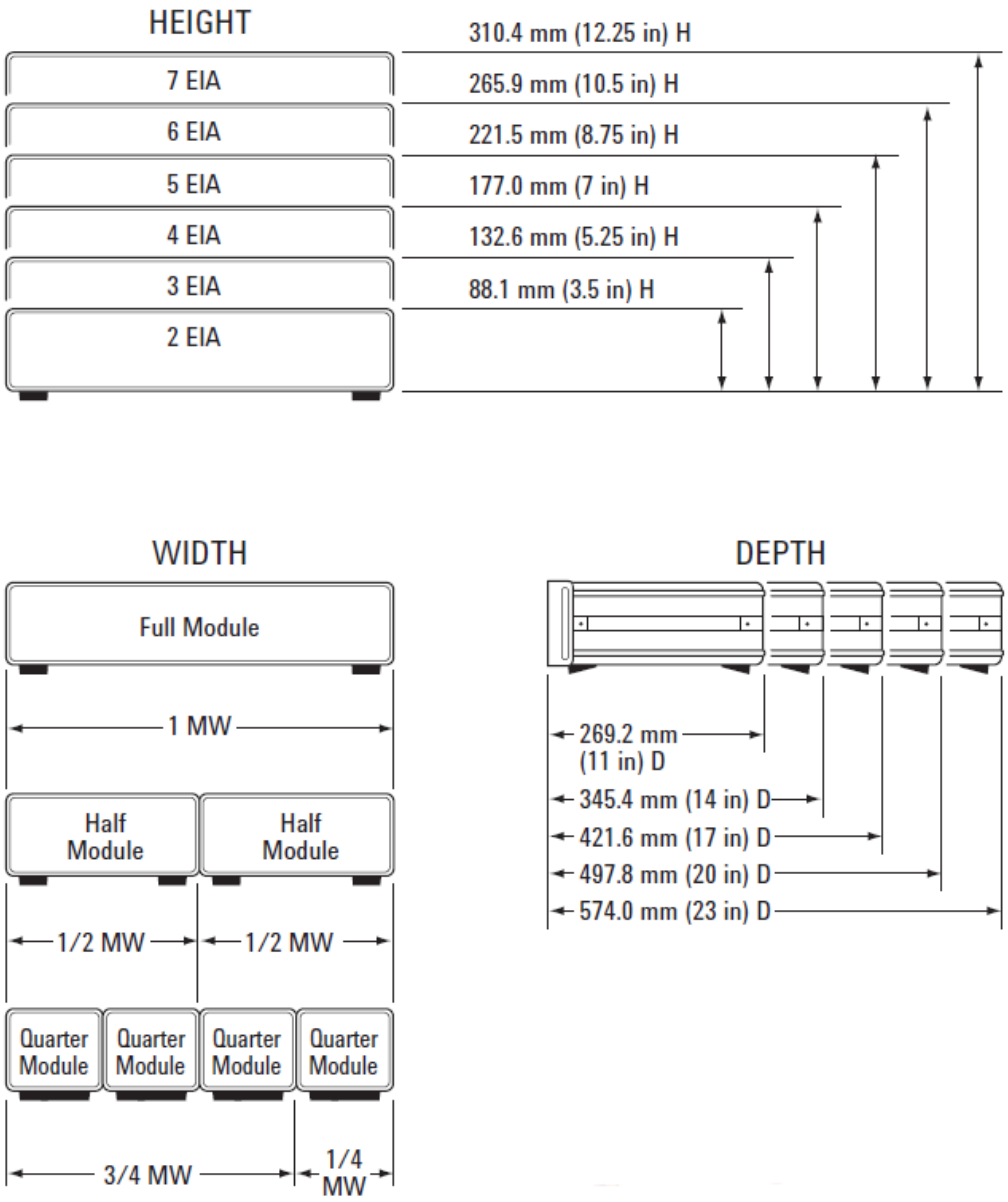

Figure 25. System II instrument sizes

The instrument width is measured in module width (MW). The module width measurement is an important feature for determining rackmounting requirements. 1 MW is equivalent to the full width of the rack.

Most equipment can be ordered with handles and flanges at the time the equipment is ordered. If you have an instrument without the necessary hardware, then use the following pages to add flanges and handles.

Mounting Other Instruments

Some Keysight instruments are use non- System II cabinets. These products typically have rack-mounting options. See the specific product's data sheet for those details.

Non-Keysight instruments that comply with the industry-standard units may be easily rack-mounted as well.

Handles and Rackmount Flange Kits

Handles and rack flanges are available for all System II cabinets. They find most use on full width modules or combinations of narrower modules locked together to form one module width (MW). See page 27 for information about module widths and instrument heights and depths.

Flanges secure the instrument to the front mounting column of the rack. All Keysight flange kits attach to the instrument using pre-existing holes in the instrument case. Flanges alone will not support the weight of an instrument in the rack. The appropriate rails or slides must be purchased for support.

Some instruments are supplied with front handles as part of the selling price. Handles and rack flanges can be supplied with most other instruments for an added cost by specifying the appropriate option at the time of order.

Alternatively, the equivalent mounting hardware may be ordered after receipt of the instrument. Options include (refer to Figure 26):

- Front handle kit (A)
- Rackmount flange kits (B)
- Handles with rack flanges (C)
- Flange kit for instruments with previously supplied handles (D)



Rack Configuration Hint

Keysight rackmount kits include metric fasteners. Instruments compatible with metric fasteners are identified with a "metric" embossment in the front bezel casting under the plastic trim strip and on the middle of the rear bezel casting.



Rack Configuration Hint

The rackmount flange kits secure your instrument to the front columns of the rack. You must also select the appropriate rails or slides to support the weight of the instrument in the rack. See pages 36 and 37 for rail and slide information.

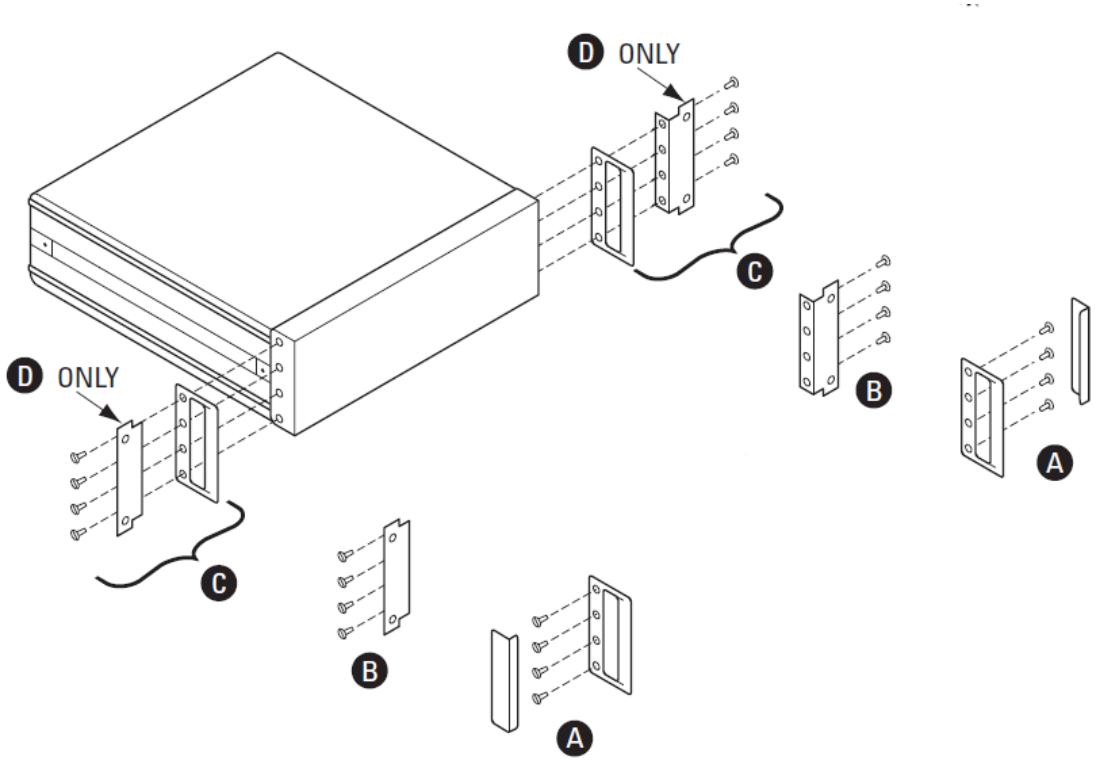

Figure 26. Handle and Flange kits

Front Handle Kit

Order a front handle kit when your instrument does not come with pre-installed handles. Check to make sure your instrument requires handles, as many instruments are supplied with previously installed handles. Flanges attach to pre-existing holes in the instrument case.



Figure 27. Front handle Kit

Rackmount Flange Kits

Flange kits are available for all System II instruments. Flanges attach to pre-existing holes in the instrument case. These flanges do not have a notch for handles, and therefore cannot be used for instruments that have handles. Flanges attach to pre-existing holes in the instrument case.



Figure 28. Rackmount flange kit

Flange Kits with Handles

This kit includes both flanges and handles. Flanges attach to pre-existing holes in the instrument case.

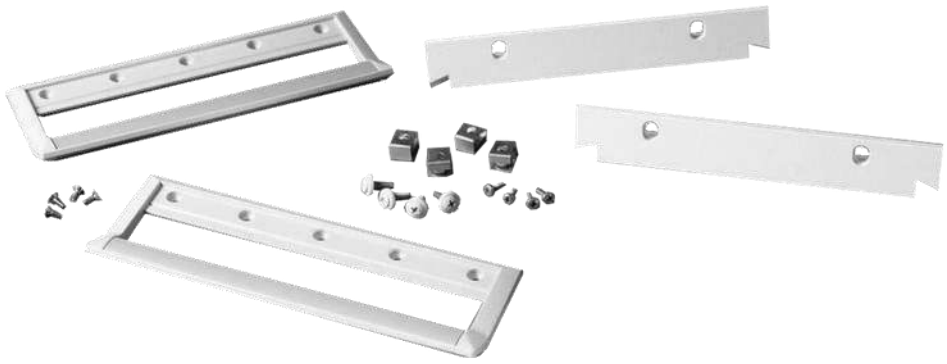

Figure 29. Rackmount flange and handle kit

Rackmount Flange Kit for Instruments with Previously Supplied Handles

Certain Keysight instruments are supplied with front handles. These flange kits have a special cut out to accommodate the handles. Flanges attach to pre-existing holes in the instrument case.



Figure 30. Rackmount flange kit for instruments with previously supplied handles

Selecting a Rackmount Flange or Handle Kit

The following tables list the kits available for use after receipt of the equipment. Field installation is straightforward.

- A plastic trim strip is easily removed, and the handle or flange attaches with screws supplied in the kit.
- Before rack-mounting, bottom feet must be removed.

Rackmount Kits (New Phantom Gray Color)				
Instrument Height	**Front Handle Kit (A)**	**Rackmount Flange Kit (B)**	**Flange Kit with Handles (C)**	**Flange Kit for Previously Supplied Handles (D)**
88.1 mm (3.5 in)	1CN106A	1CM107A	1CM111A	1CM122A
132.6 mm (5.25 in)	1CN107A	1CM104A	1CP108A	1CM104A
177.0 mm (7.0 in)	1CN103A	1CM113A	1CP105A	1CM127A
221.5 mm (8.75 in)	1CN105A	1CM115A	1CP120A	1CM143A
265.9 mm (10.5 in)	1CN120A	1CM142A	1CP119A	1CM136A
310.4 mm (12.25 in)	NA	1CM133A	1CP122A	1CM138A

Rackmount Kits (Legacy Quartz Gray Color)				
Instrument Height	Front Handle Kit (A)	Rackmount Flange Kit (B)	Flange Kit with Handles (C)	Flange Kit for Previously Supplied Handles (D)
88.1 mm (3.5 in)	1CN006A	34191A/5063-9212[4]	1CP001A/5063-9220[5]	5063-9232[6]
132.6 mm (5.25 in)	1CN007A	34192A	1CP008A	NA
177.0 mm (7.0 in)	1CN003A	1CM013A	1CP005A	1CM034A
221.5 mm (8.75 in)	1CN005A	1CM015A	1CP020A	1CM043A
265.9 mm (10.5 in)	1CN020A	1CM042A	1CP019A	5063-9237
310.4 mm (12.25 in)	NA	1CM033A	5062-9225	NA

Rackmount Adapter Kits

Rackmount adapter kits are available to mount an instrument, or combination of instruments, that is less than one full module width (MW).

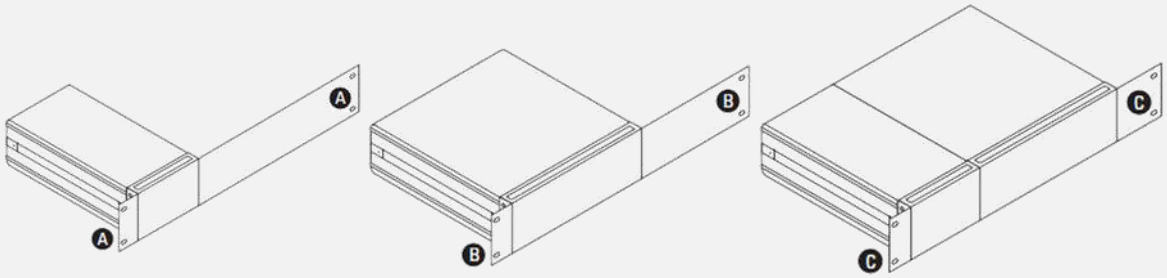

Figure 31. Rackmount adapter kits

- Individual 1/4 MW or 1/2 MW modules use these kits
- Combinations of 1/4 MW or 1/2 MW (of equal depth) are first joined side-by- side with the Lock Link Kit (see page 35). Combinations joined side-by-side must be the same depth and height. Then the rackmount adapter kit is applied. If modules are of unequal depth or height, a support shelf (as shown on page 34) can be used.
- For combinations of instruments adding to 1 MW, use the rackmount flange kit (see Selecting a Rackmount Flange or Handle Kit, page 30.
- Hole patterns conform to EIA and IEC standards.

[4] Includes standard flanges with 1.75-inch hole spacing.
[5] Includes special flange with 3-inch hole spacing.
[6] Will not fit onto instruments with previously supplied handles.

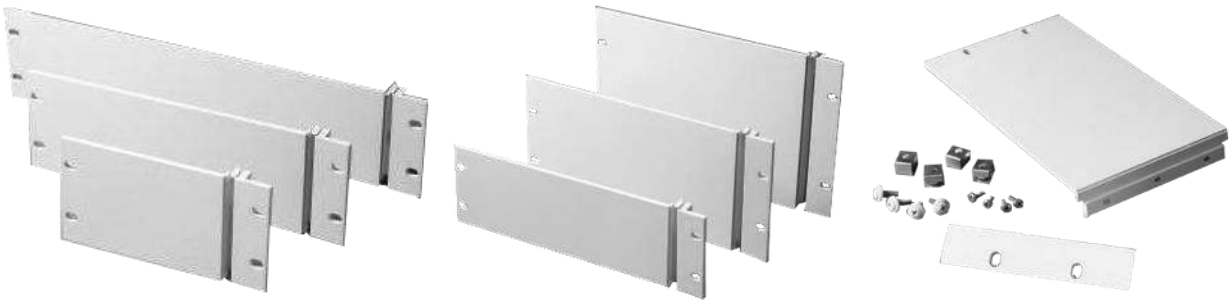

Figure 32. Example rackmount adapter kits

Selecting a Rackmount Adapter Kit

Rackmount Adapter Kits (New Phantom Gray Color)			
Instrument Height	**Mounts ¼ MW Modules (A)**	**Mounts ½ MW or two each ¼ MW[7] modules (B)**	**Mounts ¾ MW (3 each ¼ MW[8] or ¼ and ½ MW side-by-side) (C)**
88.1 mm (3.5 in)	NA	1CM124A	1CM119A
132.6 mm (5.25 in)	NA	1CM116A	NA
177.0 mm (7.0 in)	NA	NA	NA

Rackmount Adapter Kits (Legacy Quartz Gray Color)			
Instrument Height	**Mounts ¼ MW Modules (A)**	**Mounts ½ MW or two each ¼ MW[7] modules (B)**	**Mounts ¾ MW (3 each ¼ MW[8] or ¼ and ½ MW side-by-side) (C)**
88.1 mm (3.5 in)	5063-9239	34190A	1CM019A
132.6 mm (5.25 in)	NA	34193A	NA
177.0 mm (7.0 in)	NA	5063-9245	NA

[7] Side-by-side modules of equal depth require a Lock Link Kit (see page 35).
[8] ¼ MW can be center mounted using two of these kits.

Rackmount Accessories

Support Shelf

These shelves are available for instruments less than 1 MW.

- Submodules of differing heights, widths, and depths (up to 20 inches deep) can be rack-mounted using these support shelves. Any combination of 1/4 MW and 1/2 MW will fit side-by-side up to 1 MW.
- The slide kit (PN 1494-0015) is required for installation of the support shelf. It provides ready access to internal shelf areas. The slide kit includes brackets and mounting hardware.

Rack Configuration Hint

Adapter kits, handles or flanges are not required if a support shelf is used.

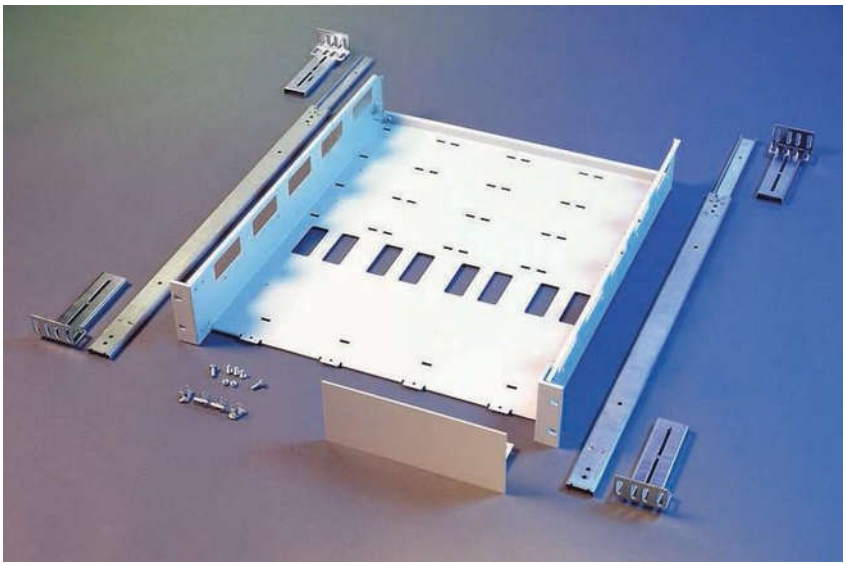

Figure 33. Support Shelf and slide kit

Support Shelf Characteristics and Specifications

Characteristic	5063-9255	5063-9256	5063-9257
Material	Cold-rolled steel	Cold-rolled steel	Cold-rolled steel
Weight	4.5 kg (10 lbs)	4.5 kg (10 lbs)	4.5 kg (10 lbs)
Color	Quartz gray	Quartz gray	Quartz gray
Length	527.6 mm (20.77 in.)	527.6 mm (20.77 in.)	527.6 mm (20.77 in.)
Height	88.9 mm (3.5 in.)	133.4 mm (5.25 in.)	177.8 mm (7 in.)
Width	447.5 mm (17.618 in.)	489 mm (19.25 in.)	489 mm (19.25 in.)
Load Capacity	22.7 kg (50 lbs)	22.7 kg (50 lbs)	22.7 kg (50 lbs)

Lock Link Kits and Locking Feet Kits

All submodule cabinets of equal depths can be linked together vertically or side- by-side with hardware in the lock link kit. Cabinet frames are already pre-threaded to allow quick assembly.

For side-by-side connections, the Lock Link Kit contains 12 front hooks and 6 rear links, enough for 3 side- by-side joints. For submodule vertical connections, the kit also contains 4 front hooks and 4 rear links, enough for 2 over/under joints. The kit includes metric screws.

The Locking Feet Kit (5062-3999) is designed to accommodate full module vertical combinations of greater weight. The Lock Link Kit is recommended for only submodule vertical combinations, as well as side-by-side combinations.

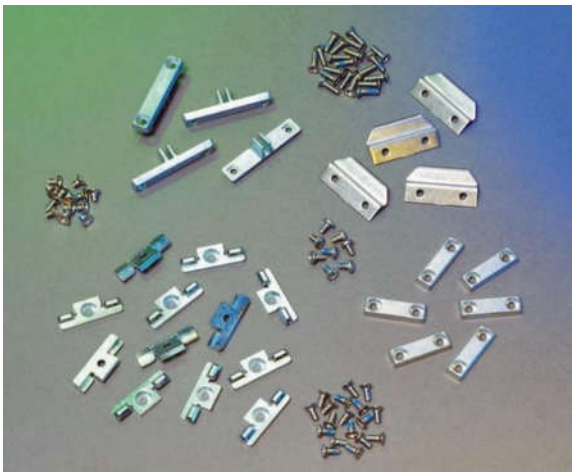

Figure 34. Lock linking kit (5061-9694)



Figure 35. Locking feet kit (5062-3999)

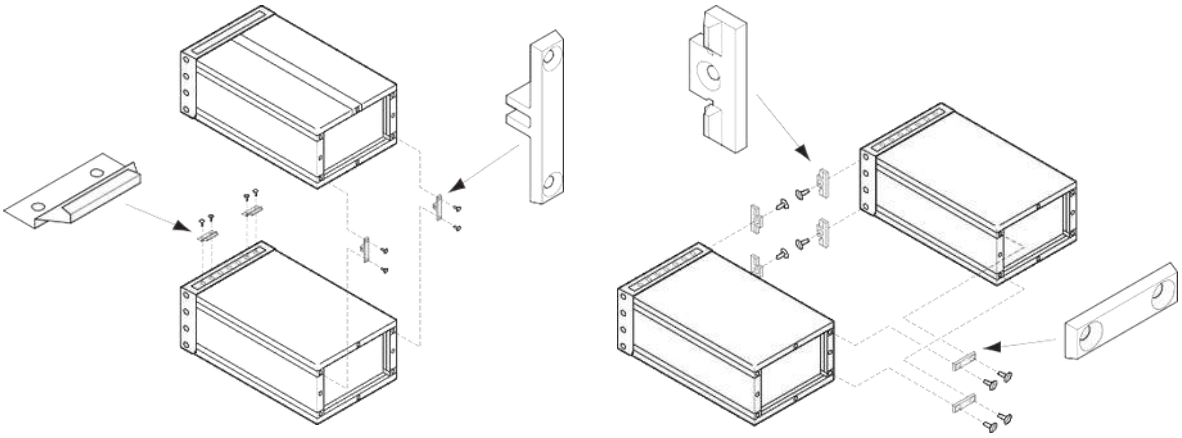

Figure 36. Vertical and horizontal linking configurations

Rail and Slide Kits

Keysight offers a variety of rail kits to meet instrument and controller rack mounting requirements. Instrument rackmount kits alone are not designed to support the full weight of most instruments and may deform or break. Rails and slides are available to support the rear of the instrument.

Proper rail selection is important to maximize the use of all EIA units in a rack and to assure proper fit vertically between instrument front panels.

Keysight offers a set of support rails that can cut in half the time required to install equipment in a rack. The rails hang on discrete slots on the vertical mounting columns, corresponding to each EIA unit in the rack. Vertical adjustment between instruments is minimized by selecting the proper rail. The system was specifically designed to minimize the time required to install Keysight instrumentation and can be used with other equipment. Rails will support up to 113 kg (250 lbs).

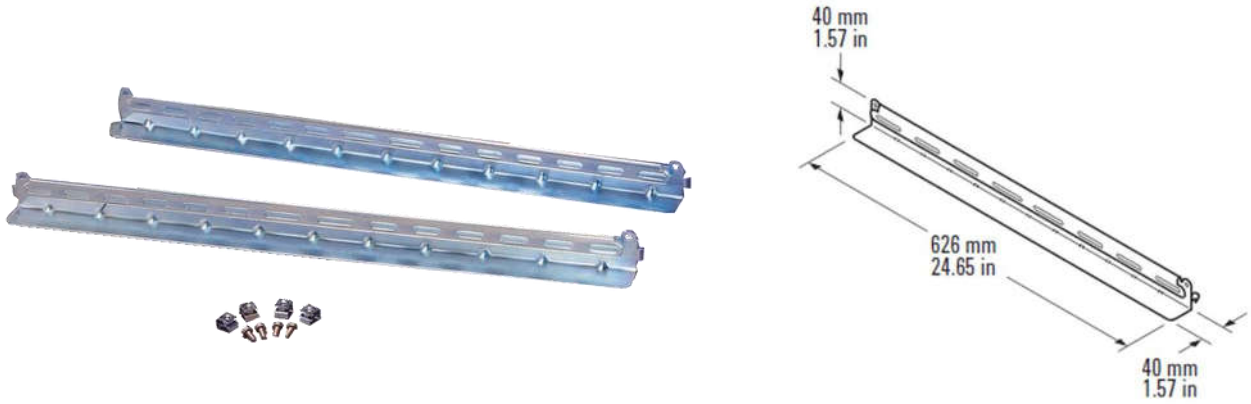

Figure 37. Basic rail kit (E3663AC)

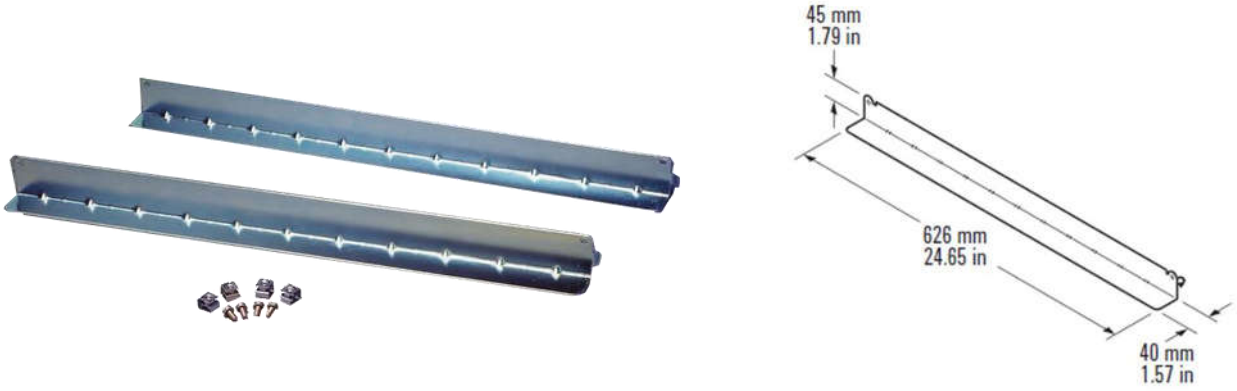

Figure 38. Third party rail kit (E3664AC)

Slide Kits

Rack slides are available for full width System II cabinets to permit easy access to internal spaces. Each kit consists of two slides that mount directly to System II cabinet slide handle recess spaces (after removing the side handles). The slides also mount directly to vertical support columns in Keysight racks.

- Non-tilting standard-duty slides carry 38.6 kg (85 lb) maximum load.
- Non-tilting heavy-duty slides carry 79.3 kg (175 lb) maximum load.
- Slide kits are compatible with inch and metric instruments.

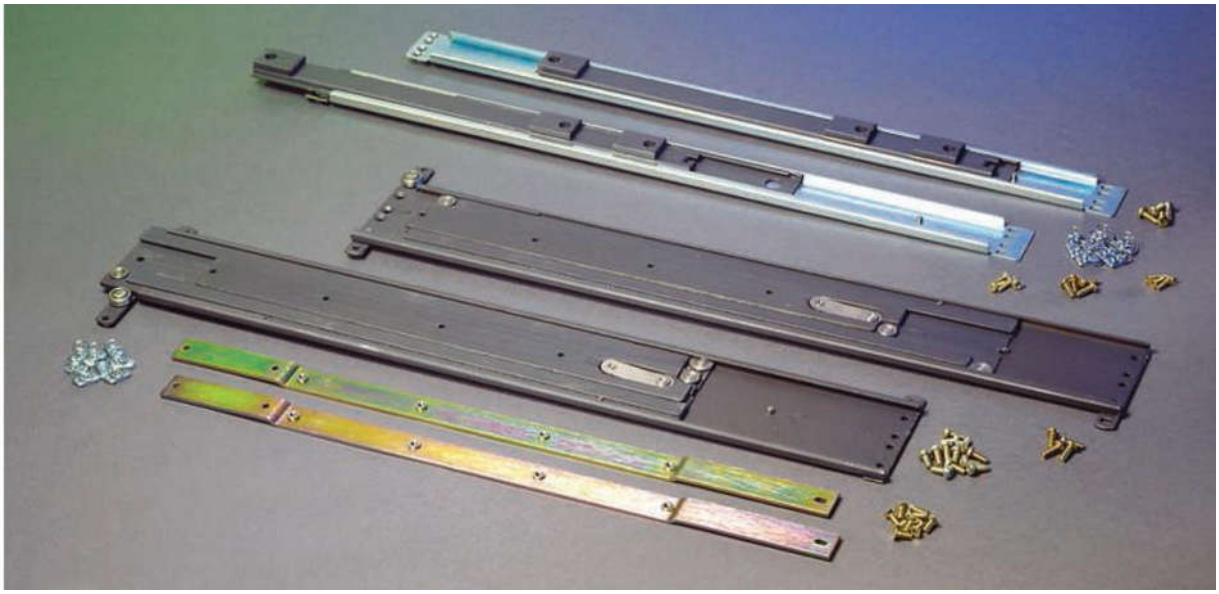

Figure 39. Slide kits (1494-0060, 1494-0059, 1494-0058, top to bottom)

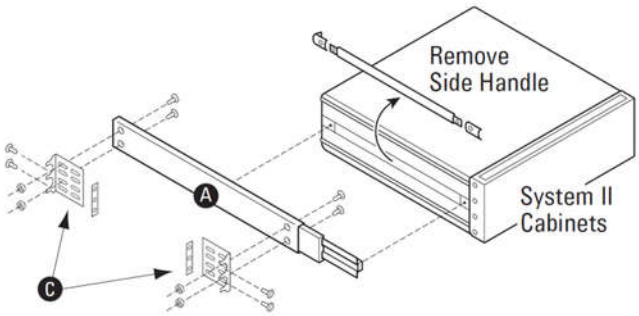

Figure 40. Standard slide kit (A) and brackets (C)

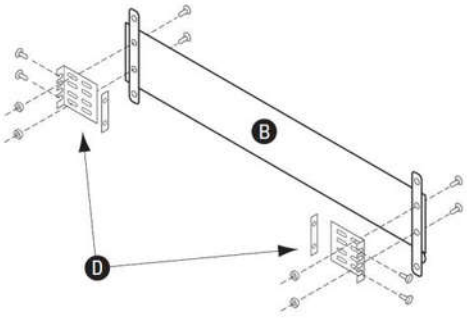

Figure 41. Heavy-duty slide kit (B) and brackets (D)

End Brackets

End-bracket kits are available for both Keysight standard and heavy-duty slide kits. Slotted hole arrays in the brackets provide for front-to-back rack column spacing of up to a maximum of 609.45 mm (24 in) for standard slides and 688.9 mm (27.12 in) for the heavy-duty slides. These general-purpose mounting brackets fit most common non-Keysight racks that have L or U-shaped columns with EIA standard hole patterns.

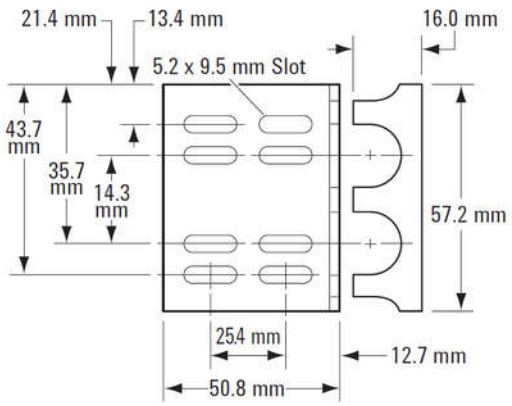

Figure 42. Standard end bracket dimensions

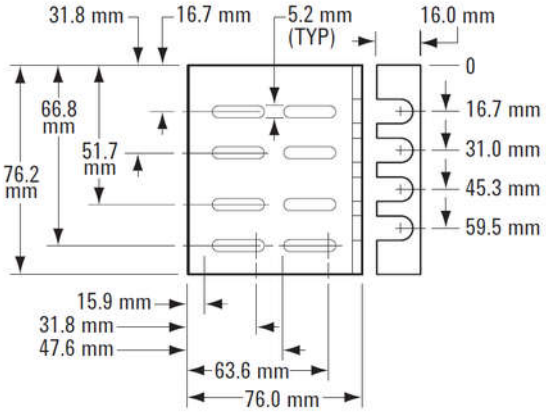

Figure 43. Heavy-duty end bracket dimensions

Rack Filler Panels

Spaces between instruments on the front face of the Keysight rack cabinet can be filled with metal filler panels. Filler panels provide an attractive system and eliminate dust from gathering on equipment.

- Quartz gray.
- Each panel is 19 inches wide.
- Includes mounting hardware.



Figure 44. Filler panels

IEC-320 Female-Male Power Cables

Most Keysight products are shipped with detachable power cords with a localized male plug on one end and an IEC-320 female connector to plug into the instrument. Substitute the regular power cord with one of the following to connect your Keysight instrument/controller to the IEC-320 versions of our PDUs.



Figure 45. IEC-320 female-male power cables (8120-1860)

Rackmount Accessory Ordering Information

Accessories	
5063-9255	88.1 mm (3 1/2 in) support shelf
5063-9256	132.6 mm (5 1/4 in) support shelf
5063-9257	177.0 mm (7 in) support shelf
1494-0015	Support shelf slide kit
5061-9694	Lock link kit for linking submodule cabinets of equal height
5062-3999	Locking feet kit for full module vertical combinations
E3663AC	Basic Rail Kit (for System II instruments)
E3664AC	3rd Party Rail Kit
1494-0060	Slide kit: Non-tilting, standard duty (Fits 345.4 D and 421.6 D)
1494-0059	Slide kit: Non-tilting, standard duty (Fits 497.8 D and 574.0 D)
1494-0058	Slide kit: Non-tilting, heavy duty (Fits 345.4 D and 421.6 D)
1494-0061	End brackets, standard duty
1494-0064	End brackets, heavy duty
E7731A	1 EIA unit filler panel
E7732A	2 EIA unit filler panel
E7733A	3 EIA unit filler panel
E7734A	4 EIA unit filler panel
E7735A	5 EIA unit filler panel
E7736A	6 EIA unit filler panel
E7737A	7 EIA unit filler panel
8120-1575C	762 mm (30 in) gray power cable
8120-1860	1524 mm (60 in) gray power cable

Testmobiles and Accessories

Keysight Testmobile Carts add protection and mobility to test instruments and systems. The convenience of mobility makes instruments readily available when needed. The cart effectively extends the amount of lab bench space. Ergonomic cart and accessory design make test equipment accessible to the operator, whether seated or standing at the test area. Additionally, several operators can cost effectively share expensive equipment that has been mounted on a Testmobile Cart.

Keysight testmobile carts are offered in cart capacities to provide optimum instrument test configuration:

- Scope cart, 59 kg (130 lb)
- System cart, 227 kg (500 lb)

Testmobile Benefits

Add mobility to your instruments

Keysight Testmobile carts provide convenient mobility of test equipment, PCs, or workstations to make them readily available when needed. This capability effectively extends the amount of lab bench space available. Mar- resistant, heavy-duty 5-inch hard rubber casters make moving instruments easy. All casters swivel, which lets the cart move right up to the workbench.

Bring the equipment to the test

Rather than bringing the test to the equipment, Keysight Testmobile carts bring the equipment to the test, to save time and get right to the task. Testmobile carts provide a convenient way to move everything from a small oscilloscope to a complete test system to the work to be tested.

Share expensive instruments

Keysight Testmobile carts allow several operators in a work group to cost- effectively share expensive equipment. In the case of a small test system, all instruments can be conveniently combined in one place, load capacity, and rackmount capability of the testmobile system cart.

Protect your investment

Unlike general-purpose cart design, Keysight testmobile carts have a nylon strap and steel buckle that secure instruments to the cart, and instrument feet fit securely in slots in both upper tilt tray and lower fixed tray. Expensive instruments are prevented from sliding or tipping off the cart. Locking brakes on rear wheels provide added safety and convenience.

Use instruments with ease

The ergonomically designed tilt tray adjusts 30-plus degrees for viewing and using instruments in comfort whether seated or standing. Lifting and carrying heavy instruments is no longer necessary with the mobility provided by Keysight testmobile carts.

Testmobile Key Features

Keysight's Testmobile Carts offer the following attractive features:

- Ergonomic design. Test equipment is operator-accessible whether seated or standing.
- Heavy-duty casters make moving instruments easy.
- Includes a nylon strap and steel buckles to secure instruments to the cart.
- Tilt tray adjusts 30-plus degrees for viewing comfort.
- Attractive quartz gray color

Testmobile Cart Selection Criteria

If rackmounting instruments and accessories is required, select the 1181BZ Testmobile system cart. It accommodates instruments up to 24 inches and a static drag chain is supplied. For simpler applications with instruments with a depth up to 17 inches, select the Keysight 1180CZ Testmobile scope cart.

Testmobile Scope Cart, 1180CZ

The Scope Cart is conveniently shipped virtually assembled, except for its handle and casters.

- Tilt tray load capacity = 29.5 kg (65 lb)
- Total load capacity = 59 kg (130 lb)
- Tilt tray = 457 mm W x 457 mm D (18 in W x 18 in D)



Figure 46. Testmobile scope cart (1180CZ)

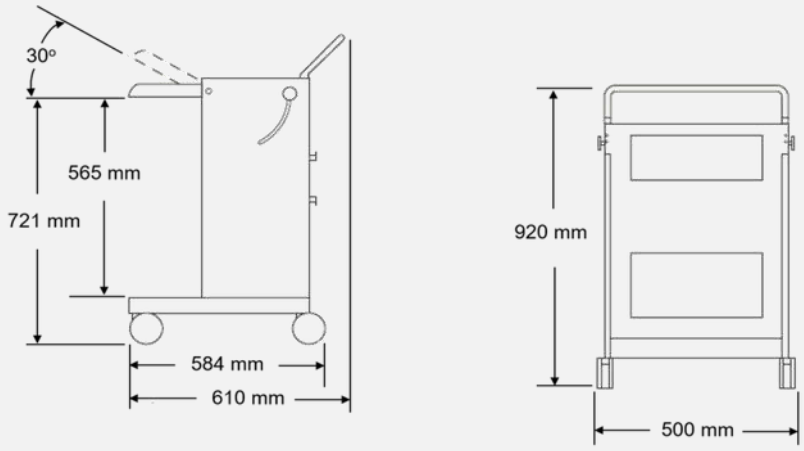

Figure 47. 1180CZ Dimensions

Testmobile System Cart, 1181BZ

The System Cart is a small mobile rack that allows for additional equipment to be installed. That cart has space for the rack-mounting of any 19” EIA instrument up to 24” deep. The cart is conveniently shipped virtually assembled, except for its handle.

- Tilt tray load capacity = 90.7 kg (200 lb)
- Total load capacity = 226.8 kg (500 lb)
- Tilt tray = 559 mm W x 660 mm D (22 in W x 26 in D)
- Rackmount any 19-inch EIA instrument up to 24 inches deep beneath the tilt tray in EIA columns.
- 12 EIA units available for rack-mounting.
- Includes one set of 5957-8476C angle rails to support rack-mounted instruments



Figure 48. Testmobile system cart (1181BZ)

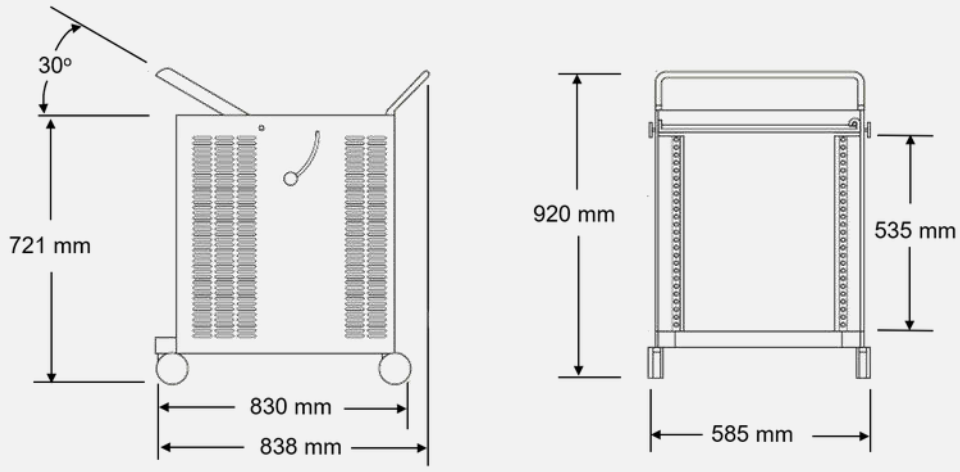

Figure 49. 1181BZ Dimensions

Testmobile Characteristics and Specifications

Characteristic	1180CZ Scope Cart	1181BZ System Cart
Tilt tray load	29.5 kg (65 lb)	90.7 kg (200 lb)
Total load	59.0 kg (130 lb)	226.8 kg (500 lb)
Cart net weight	18.1 kg (40 lb)	39.0 kg (86 lb)
Color	Quartz gray	Quartz gray
Vertical rack space[9]	NA	533 mm (21.0 in – 12 EIA units)
Maximum instrument depth	432 mm (17.0 in)	635 mm (25.0 in)
Casters	101 mm (4 in) diameter	127 mm (5 in) diameter

[9] Vertical rack space is reduced the more the tilt is angled.

Enhance Instrument Output

The Keysight 1181BZ Testmobile System Cart can be customized with a range of easy-to-mount accessories:

- Work surface and anti-static mat
- Plotter/printer stand, which can be set up either 305 mm or 381 mm (12 in or 15 in) high
- Storage drawer (3.5 inch or 5.25 inch) (see page 19).
- Angle rails for supporting rack mounted Instruments

Testmobile Work Surface

Keysight's testmobile work surface provides additional work space on a testmobile cart. It can be used for accessories, writing, or a keyboard and mouse. The work surface attaches to the testmobile tilt tray.

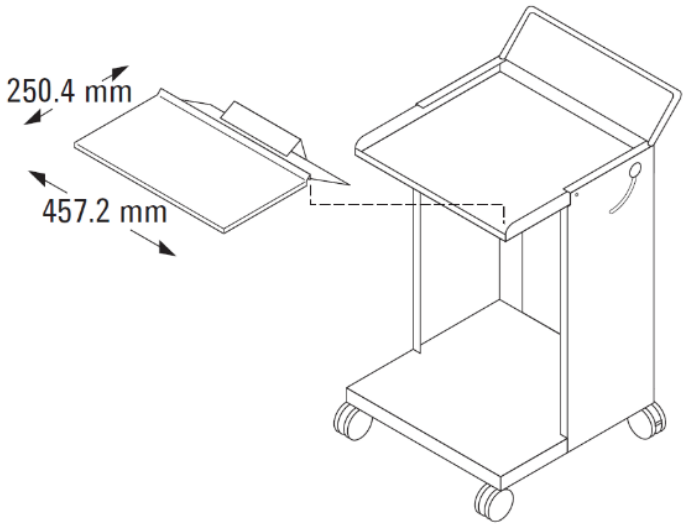

Figure 50. Testmobile work surface

Testmobile Work Surface Characteristics and Specifications

Characteristic	35181KZ Work Surface
Material	Cold-rolled steel
Weight	4.99 kg (11 lbs)
Color	Quartz gray

Testmobile Printer/Plotter Stand

Conveniently mount a printer or plotter on top of a system or instrument testmobile with the Keysight testmobile printer/plotter stand.

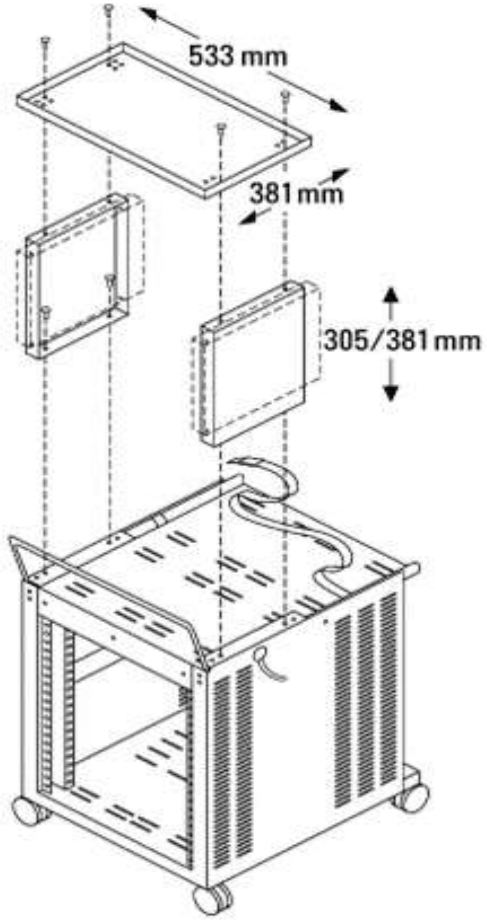

Figure 51. Printer/plotter stand

Testmobile Printer/Plotter Stand Characteristics and Specifications

Characteristic	35181HZ Printer/Plotter Stand
Material	Cold-rolled steel
Weight	8.16 kg (18 lbs)
Color	Quartz gray
Load capacity	11.34 kg (25 lbs)

Testmobile Accessories Selection Chart

Part number	Description	1180CZ Scope Cart	1181BZ System Cart
35181HZ	Printer/plotter stand	NA	Yes
35181KZ	Work surface	NA	Yes
35181J	Storage drawer 3.5” high	NA	Yes
35181M	Storage drawer 5.25” high	NA	Yes
35181E	Support cover/shelf for drawers	NA	Yes
5957-8476	Angle rails for rack mounting	NA	Yes
8120-1575C	IEC-320 cable, 762 mm (30 in.)	Yes	Yes
8120-1860	IEC-320 cable, 1.5 m (60 in.)	Yes	Yes

Conclusion

Keysight Technologies offers 19-inch EIA (Electronics Industries Association) rack cabinets tailored to meet the needs of test and measurement instrumentation customers. Keysight racks are specifically designed for Keysight’s test and measurement equipment, virtually ensuring a perfect fit. They will also accommodate non-Keysight equipment making them suitable for a mixed instrument environment. Rack mounting is fast and easy with unique design features. A selection of options and accessories provides flexibility to meet the vast majority of racking applications.

Learn more at: www.keysight.com

For more information on Keysight Technologies’ products, applications or services, please contact your local Keysight office. The complete list is available at: www.keysight.com/find/contactus

This information is subject to change without notice. © Keysight Technologies, 2019 - 2020, Published in USA, August 25, 2020, 5980-0450EN