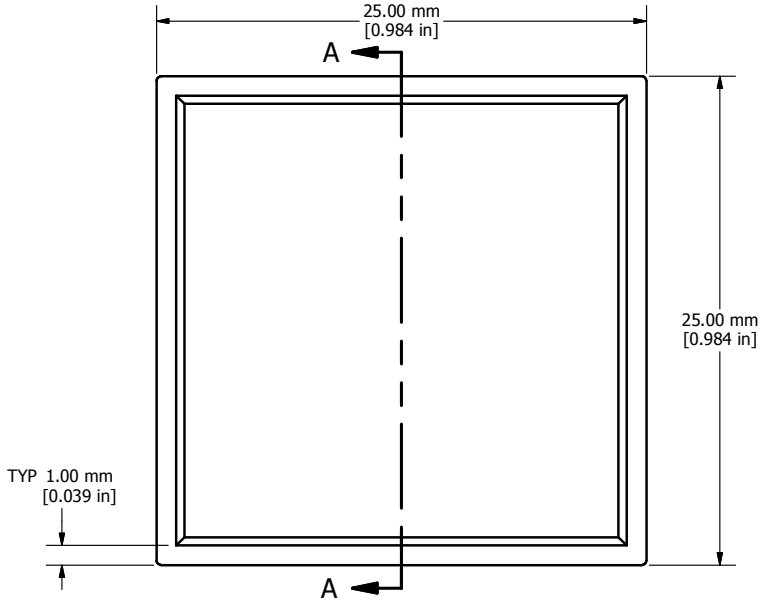

TOP VIEW

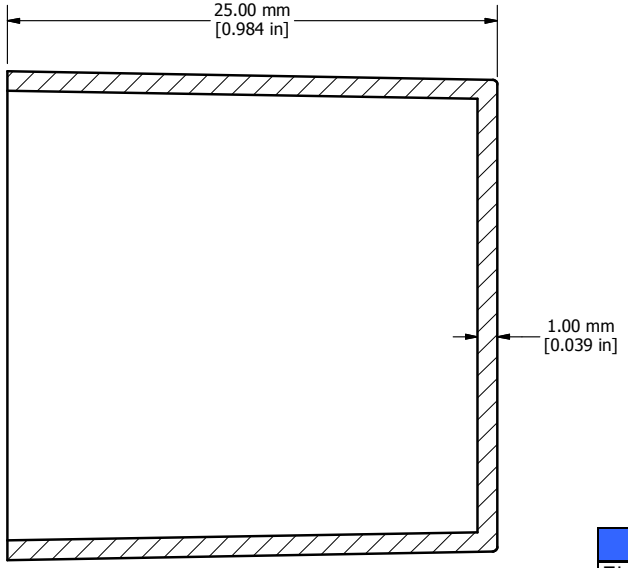

SECTION A-A

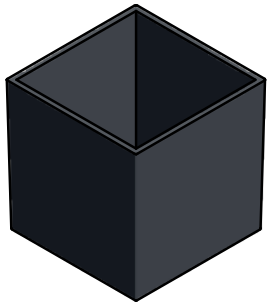

ISOMETRIC VIEW

1596B112	
Finish - Black (Smooth)	
Material - ABS Plastic	
Quantity	
1596B112	1 Box
1596B112-10	10 Boxes
1596B112-BULK	Bulk Packed

HAMMOND MANUFACTURING™

1596B112

www.hammondmfg.com