# DATASHEET - M22-LED-B



**Light element, LED, blue, front mount, 12-30VAC/DC, screw connection**

| | |
|---|---|
| **Part no.** | **M22-LED-B** |
| **Catalog No.** | **218057** |
| **Alternate Catalog No.** | **M22-LED-BQ** |
| **EL-Nummer (Norway)** | **4355370** |

## Delivery program

| | | | |
|---|---|---|---|
| Basic function accessories | | | LED elements |
| Connection technique | | | Screw terminals |
| Fixing | | | Front fixing |
| Rated operational voltage | $U_e$ | V | 12 - 30 V AC/DC, 50/60 Hz |
| **Rated operational current** | $I_e$ | mA | 8 - 15 |
| Power consumption | $P_{max.}$ | W | 0.26 |
| Lifespan to EN 60064 at $t_a$ = +25 °C | $t_{mean}$ (AC) | h | 100000 |
| Degree of Protection | | | IP20 |
| | | | at 24 V |
| **Colour** | | | |
| | | | Blue |
| | | | 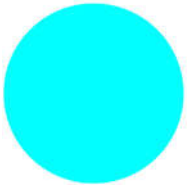 |
| Connection to SmartWire-DT | | | no |
| Approval | | |  |
| Connection technique | | | Screw terminals |

**Notes**

For indicator lights, illuminated pushbutton actuators, and illuminated selector switch actuators, the following applies:

M22...-R only in combination with M22-LED...-R

M22...-G only in combination with M22-LED...-G

M22...-W only in combination with M22-LED...-W

M22...-Y only in combination with M22-LED...-W

M22…-B in combination with M22-LED…-W or M22-LED…-B

## Technical data

### General

| | | | |
|---|---|---|---|
| Standards | | | IEC 60947-5-1 |
| Operating torque (screw terminals) | | Nm | ≦ 0.8 |
| Degree of Protection | | | IP20 |
| Climatic proofing | | | Damp heat, constant, to IEC 60068-2-78<br>Damp heat, cyclic, to IEC 60068-2-30 |
| Ambient temperature | | | |
| Open | | °C | -25 - +70 |
| Storage | | °C | - 40 - + 80 |
| Mounting position | | | As required |

| | | | |
|---|---|---|---|
| Mechanical shock resistance according to IEC 60068-2-27<br>Shock duration 11 ms, half-sinusoidal | | g | > 30 |
| Mechanical shock resistance | | g | 30<br>Shock duration 11 ms<br>Sinusoidal<br>according to IEC 60068-2-27 |
| Terminal capacities | | $mm^2$ | |
| Solid | | $mm^2$ | 0.75 - 2.5 |
| Stranded | | $mm^2$ | 0.5 - 2.5 |

### Contacts

| | | | |
|---|---|---|---|
| Rated impulse withstand voltage | $U_{imp}$ | V AC | 6000 |
| Rated insulation voltage | $U_i$ | V | 500 |
| Overvoltage category/pollution degree | | | III/3 |
| Indoor and protected outdoor installation | | | |

## Design verification as per IEC/EN 61439

| | | | |
|---|---|---|---|
| Technical data for design verification | | | |
| Rated operational current for specified heat dissipation | $I_n$ | A | 0 |
| Heat dissipation per pole, current-dependent | $P_{vid}$ | W | 0 |
| Equipment heat dissipation, current-dependent | $P_{vid}$ | W | 0 |
| Static heat dissipation, non-current-dependent | $P_{vs}$ | W | 0.45 |
| Heat dissipation capacity | $P_{diss}$ | W | 0 |
| Operating ambient temperature min. | | °C | -25 |
| Operating ambient temperature max. | | °C | 70 |
| IEC/EN 61439 design verification | | | |
| 10.2 Strength of materials and parts | | | |
| 10.2.2 Corrosion resistance | | | Meets the product standard's requirements. |
| 10.2.3.1 Verification of thermal stability of enclosures | | | Meets the product standard's requirements. |
| 10.2.3.2 Verification of resistance of insulating materials to normal heat | | | Meets the product standard's requirements. |
| 10.2.3.3 Verification of resistance of insulating materials to abnormal heat and fire due to internal electric effects | | | Meets the product standard's requirements. |
| 10.2.4 Resistance to ultra-violet (UV) radiation | | | Meets the product standard's requirements. |
| 10.2.5 Lifting | | | Does not apply, since the entire switchgear needs to be evaluated. |
| 10.2.6 Mechanical impact | | | Does not apply, since the entire switchgear needs to be evaluated. |
| 10.2.7 Inscriptions | | | Meets the product standard's requirements. |
| 10.3 Degree of protection of ASSEMBLIES | | | Does not apply, since the entire switchgear needs to be evaluated. |
| 10.4 Clearances and creepage distances | | | Meets the product standard's requirements. |
| 10.5 Protection against electric shock | | | Does not apply, since the entire switchgear needs to be evaluated. |
| 10.6 Incorporation of switching devices and components | | | Does not apply, since the entire switchgear needs to be evaluated. |
| 10.7 Internal electrical circuits and connections | | | Is the panel builder's responsibility. |
| 10.8 Connections for external conductors | | | Is the panel builder's responsibility. |
| 10.9 Insulation properties | | | |
| 10.9.2 Power-frequency electric strength | | | Is the panel builder's responsibility. |
| 10.9.3 Impulse withstand voltage | | | Is the panel builder's responsibility. |
| 10.9.4 Testing of enclosures made of insulating material | | | Is the panel builder's responsibility. |
| 10.10 Temperature rise | | | The panel builder is responsible for the temperature rise calculation. Eaton will provide heat dissipation data for the devices. |
| 10.11 Short-circuit rating | | | Is the panel builder's responsibility. The specifications for the switchgear must be observed. |
| 10.12 Electromagnetic compatibility | | | Is the panel builder's responsibility. The specifications for the switchgear must be observed. |
| 10.13 Mechanical function | | | The device meets the requirements, provided the information in the instruction leaflet (IL) is observed. |

## Technical data ETIM 7.0

Low-voltage industrial components (EG000017) / Lamp holder block for control circuit devices (EC000204)

Electric engineering, automation, process control engineering / Low-voltage switch technology / Command and alarm device / Bulb socket block for command and alarm devices (ecl@ss10.0.1-27-37-12-09 [AKF027014])

| | | |
|---|---|---|
| Transformer integrated | | No |
| With integrated voltage decreasing resistor | | No |
| With light source | | Yes |
| With integrated diode | | Yes |
| Lamp holder | | None |
| Rated voltage Ue at AC 50 Hz | V | 12 - 30 |
| Rated voltage Ue at AC 60 Hz | V | 12 - 30 |
| Rated voltage Ue at DC | V | 12 - 30 |
| Voltage type for actuating | | AC/DC |
| Lamp type | | LED |
| Connection type auxiliary circuit | | Screw connection |
| Colour lamp | | Blue |
| Type of fastening | | Front fastening |

## Approvals

| | |
|---|---|
| Product Standards | IEC/EN 60947-5; UL 508; CSA-C22.2 No. 14-05; CSA-C22.2 No. 94-91; CE marking |
| UL File No. | E29184 |
| UL Category Control No. | NKCR |
| CSA File No. | 012528 |
| CSA Class No. | 3211-03 |
| North America Certification | UL listed, CSA certified |
| Degree of Protection | UL/CSA Type: - |

## Dimensions

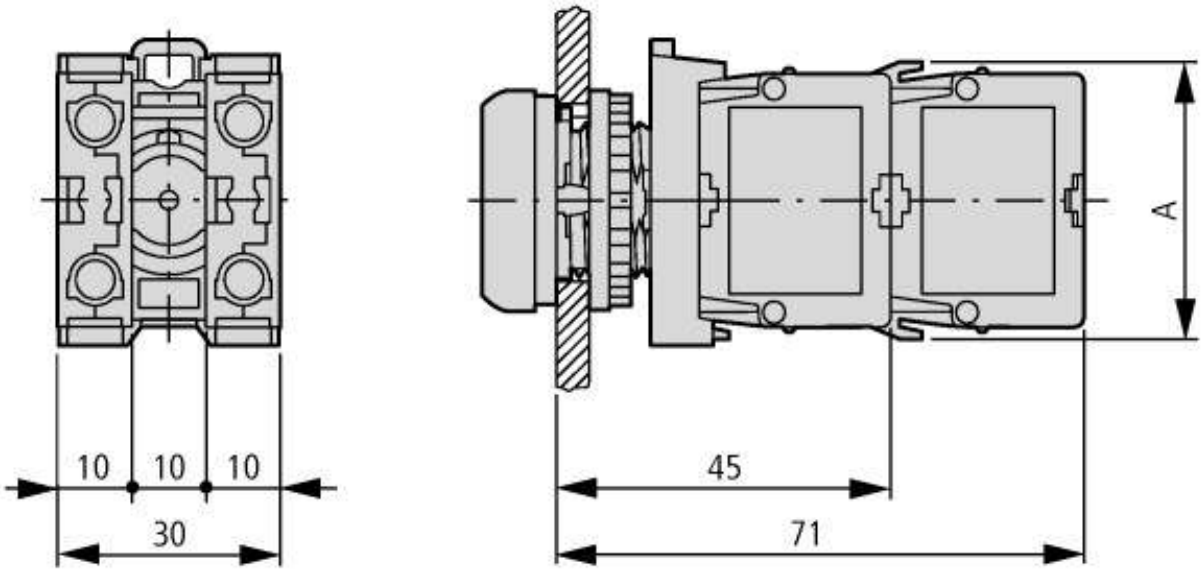


A = 37.2

Pushbutton with M22-(C)K…
Pushbutton with M22-(C) LED… + M22-XLED…


© 05/2021 by Eaton Industries GmbH