# 30848-314 PLUG-IN UNIT U-PROFILE FRONT PANEL FOR IEL, IET, TYPE 2 HANDLE, 3 U, 8 HP, 2.5 MM, AL, FRONT ANODIZED, REAR CONDUCTIVE



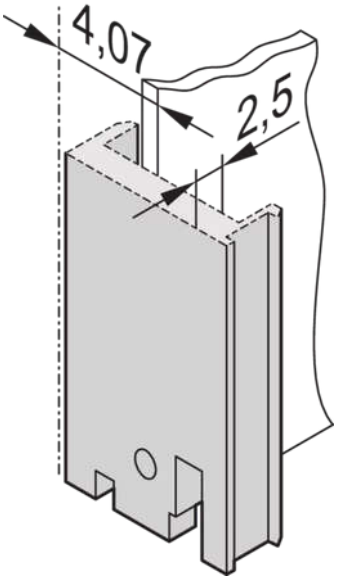


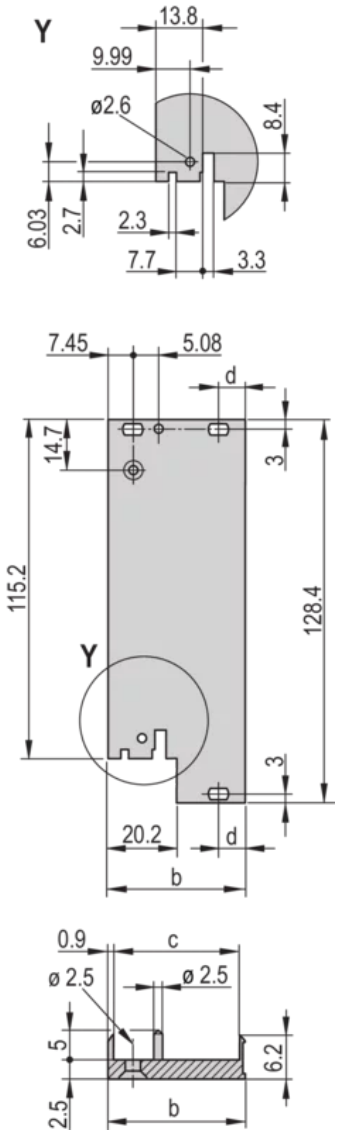


## KEY FEATURES

- For IEL/IET/Trapeziform Type 2 handle
- Al extrusion, 2.5 mm, front anodized, rear conductive
- U-profile, shieldable with textile EMC gasket
- Front panel, 3 U, for front mounting

Manufacturing process causes various surface structures to appear between 4 to 12 HP and 14 to 16 HP

Stainless steel alignment pin pressed-in

## PRODUCT ATTRIBUTES

Product Type: Front Panel

Type: Front Panel for Handle (PIU)

Accessory Type: Front panel

Handle Type: IEL; IET; Trapezoid, Type 2

Mounting: Screw-on Front

EMC Shielding: No (Retrofittable)

EMC Gasket Type: Textile

Material: Aluminum

Front Finish: Anodized

Rear Finish: Conductive

Treated Edges: No

Rack Height: 3 U

Height: 128.4 mm

Rack Width: 8 HP

Width: 40.3 mm

Depth: 2.5 mm

Complies With: IEC 60297-3-102; IEEE 1101.10; IEC 60297-3-103; IEEE 1101.1/11

Package Quantity: 5

## ADDITIONAL PRODUCT DETAILS

U-Profile front panel can be shielded with a textile gasket. It can be combined with the IEL and IET or the type 2 handle in trapezoid form.

Please order EMC profile seal separately.

Please take into consideration that deliveries may be carried out in the stated SPQs (SPQ, e.g. 5 pieces, 10 pieces, 50 pieces, etc.). Differing order quantities (e.g. 2 pieces) may be changed to the next possible delivery quantity = Standard Pack Quantity.

## CERTIFICATIONS

RoHS COMPLIANT

**North America**
All locations
+1.763.422.2661
Chat with us:
schroff.nvent.com

**Europe**
Straubenhardt, Germany
+49.7082.794.0
Betschdorf, France
+33.3.88.90.64.90
Warsaw, Poland
+48.22.209.98.35
Assago, Italy
+39.02.932.7141
Chat with us:
schroff.nvent.com

**Asia**
Shanghai, China
+86.21.2412.6943
Qingdao, China
+86.532.8771.6101
Singapore
+65.6768.5800
Shin-Yokohama, Japan
+81.45.476.0271
Chat with us:
schroff.nvent.com

**Middle East & India**
Dubai, United Arab Emirates
+971.4.378.1700
Bangalore, India
+91.80.6715.2001
Istanbul, Turkey
+90.216.250.7374
Chat with us:
schroff.nvent.com

nVent

Our powerful portfolio of brands:
nVent.com **CADDY ERICO HOFFMAN RAYCHEM SCHROFF TRACER**

© 2024 nVent. All nVent marks and logos are owned or licensed by nVent Services GmbH or its affiliates. All other trademarks are the property of their respective owners.

nVent reserves the right to change specifications without notice.