E40231

Mounting adapter for flow sensors

ADAPT /SM/1/G2 - R2

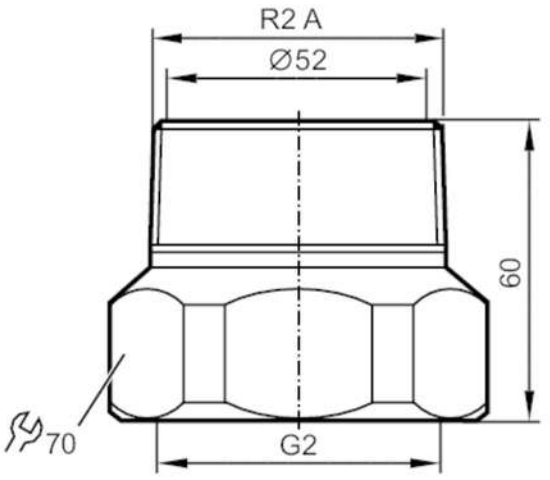

Application		
Design		for flow sensors Typ SM2, SM9
Pressure rating	[bar]	16
Mechanical data		
Weight	[g]	1336
Materials		Adapter: stainless steel (1.4571/316Ti); O-ring: FKM 47,22 x 3,53 mm
Sensor connection		G 2
Process connection		threaded connection R 2 external thread
Accessories		
Items supplied		O-rings: 2
Remarks		
Pack quantity		2 pcs.