MOUNTING & CONNECTION DETAILS

Panel Cut-out Details for Top Panel Mounting

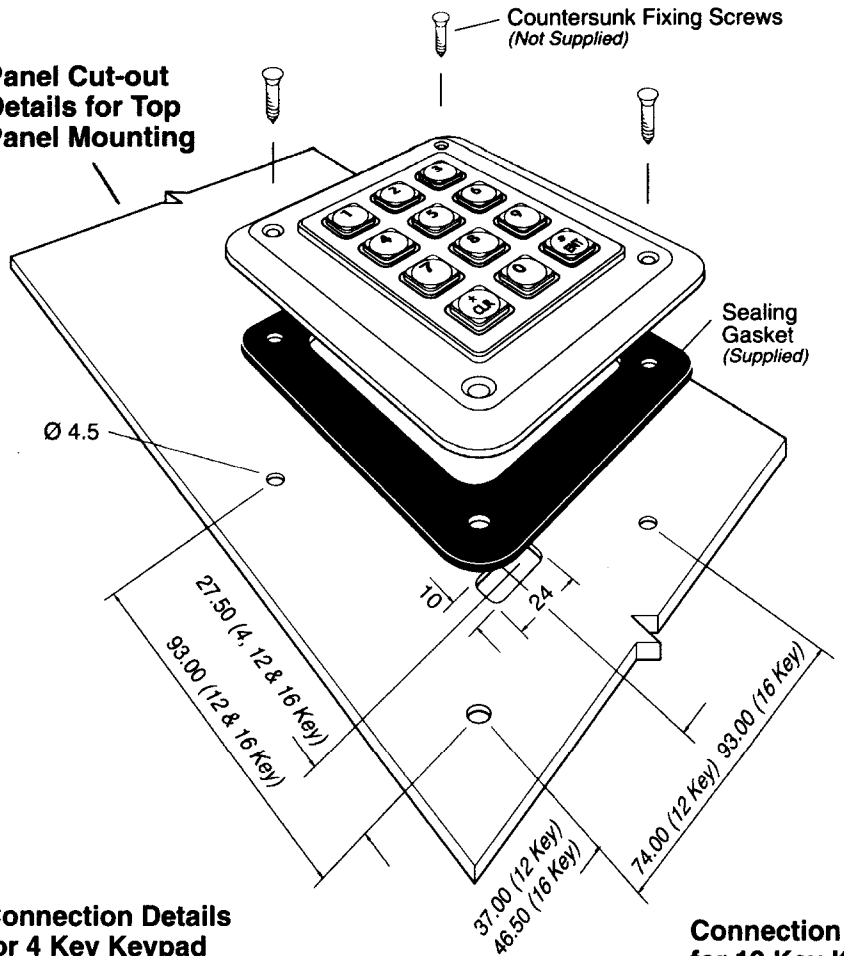

Panel Cut-out Details for Under Panel Mounting

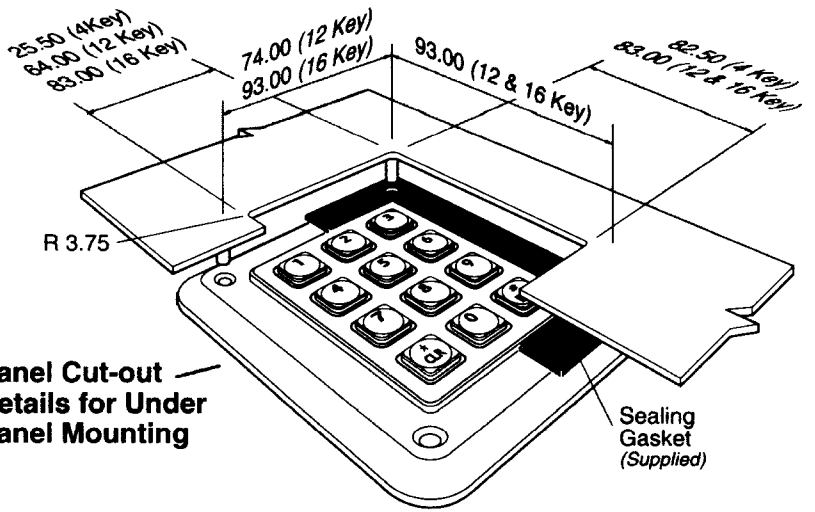

Dimensions apply to STORM 1000, 2000, 3000 & 4000 Series.

All Dimensions in Millimetres (mm).

Connection Details for 4 Key Keypad

CONTACT CONNECTIONS

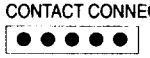

(As viewed from rear of keypad)



KEY LOCATION
(As viewed from front of keypad)

CONTACT MATRIX	
CONNEC. PIN	ROW/ COLUMN
1	
2	D
3	C
4	B
5	A

Connection Details for 12 Key Keypad

CONTACT CONNECTIONS



(As viewed from rear of keypad)

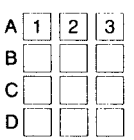

KEY LOCATION
(As viewed from front of keypad)

CONTACT MATRIX	
CONNEC. PIN	ROW/ COLUMN
1	A
2	B
3	1
4	2
5	3
6	-
7	D
8	C

Connection Details for 16 Key Keypad

CONTACT CONNECTIONS

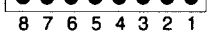

(As viewed from rear of keypad)

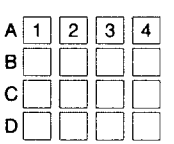

KEY LOCATION
(As viewed from front of keypad)

CONTACT MATRIX	
CONNEC. PIN	ROW/ COLUMN
1	A
2	B
3	1
4	2
5	3
6	4
7	D
8	C