Inductive Sensors





Housing Style	Part Number	ID Number	Features	Sensing Range (mm)	Output
CK40 - Embeddable/Nonembeddable, *eurofast*® Connection 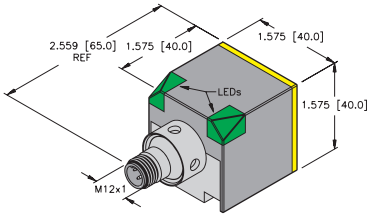	Bi20U-CK40-AN6X2-H1141 W/BS 2.1	M1627231	*Uprox*+	20	3-Wire DC NPN
	Bi30U-CK40-AN6X2-H1141 W/BS 4	M1625820	*Uprox*+	30	
	Ni50U-CK40-AN6X2-H1141 W/BS 4	M1625823	*Uprox*+	50	
	Bi20U-CK40-AP6X2-H1141 W/BS 2.1	M1627288	*Uprox*+	20	3-Wire DC PNP
	Bi30U-CK40-AP6X2-H1141 W/BS 4	M1625829	*Uprox*+	30	
	Ni50U-CK40-AP6X2-H1141 W/BS 4	M1625837	*Uprox*+	50	
	Ni50U-CK40-VN4X2-H1141 W/BS 4	M1625806	*Uprox*+/Comp. Outputs	50	4-Wire DC NPN
	Ni50U-CK40-VP4X2-H1141 W/BS 4	M1538302	*Uprox*+/Comp. Outputs	50	4-Wire DC PNP
CP40 - Embeddable/Nonembeddable, Terminal Chamber 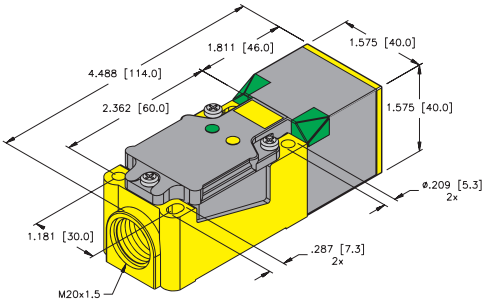	Bi20U-CP40-AN6X2	M1625828	*Uprox*+	20	3-Wire DC NPN
	Bi20U-CP40-AP6X2	M1625826	*Uprox*+	20	3-Wire DC PNP
	Bi30U-CP40-AN6X2	M1625827	*Uprox*+	30	3-Wire DC NPN
	Bi30U-CP40-AP6X2	M1625825	*Uprox*+	30	3-Wire DC PNP
	Ni50U-CP40-AN6X2	M1625824	*Uprox*+	50	3-Wire DC NPN
	Ni50U-CP40-AP6X2	M1625842	*Uprox*+	50	3-Wire DC PNP
Q80 - Embeddable/Nonembeddable, *eurofast* Connection 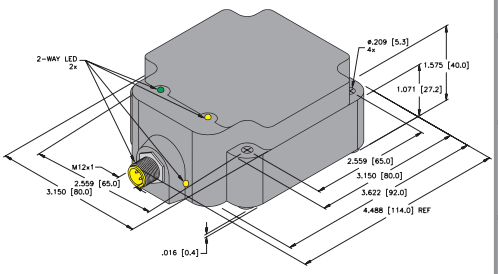	Bi50U-Q80-AN6X2-H1141	M1608944	*Uprox*+	50	3-Wire DC NPN
	Ni70U-Q80-VN4X2-H1141	M1625821	*Uprox*+/Comp. Outputs	70	4-Wire DC NPN
	Bi50U-Q80-AP6X2-H1141	M1608940	*Uprox*+	50	3-Wire DC PNP
	Ni70U-Q80-VP4X2-H1141	M1625833	*Uprox*+/Comp. Outputs	70	4-Wire DC PNP

Voltage	Switching Freq. (Hz)	Operating Current (mA)	Operating Temp. (°C)	Protection	Housing	Face	Power LED	Output LED	Mating Cordset	Wiring Diagram #
10-30 VDC	250	≤200	-20 to +70	IP 68	PBT	PBT	GN	YE	RK 4T-*	1
	250	≤200	-10 to +60	IP 68	PBT	PBT	GN	YE	RK 4T-*	1
	250	≤200	-25 to +70	IP 68	PBT	PBT	GN	YE	RK 4T-*	1
10-30 VDC	250	≤200	-20 to +70	IP 68	PBT	PBT	GN	YE	RK 4T-*	2
	250	≤200	-10 to +60	IP 68	PBT	PBT	GN	YE	RK 4T-*	2
	250	≤200	-20 to +70	IP 68	PBT	PBT	GN	YE	RK 4T-*	2
10-30 VDC	250	≤200	-25 to +70	IP 68	PBT	PBT	GN	YE	RK 4.4T-*	3
10-30 VDC	250	≤200	-25 to +70	IP 68	PBT	PBT	GN	YE	RK 4.4T-*	4
10-30 VDC	250	≤200	-25 to +70	IP 68	PBT	PBT	GN	YE	N/A	5
10-30 VDC	250	≤200	-25 to +70	IP 68	PBT	PBT	GN	YE	N/A	6
10-30 VDC	250	≤200	-25 to +70	IP 68	PBT	PBT	GN	YE	N/A	5
10-30 VDC	250	≤200	-25 to +70	IP 68	PBT	PBT	GN	YE	N/A	6
10-30 VDC	250	≤200	-25 to +70	IP 68	PBT	PBT	GN	YE	N/A	5
10-30 VDC	250	≤200	-25 to +70	IP 68	PBT	PBT	GN	YE	N/A	6
10-30 VDC	250	≤200	-25 to +70	IP 68	PBT	PBT	GN	YE	RK 4T-*	1
10-65 VDC	250	≤200	-25 to +70	IP 68	PBT	PBT	GN	YE	RK 4.4T-*	3
10-30 VDC	250	≤200	-25 to +70	IP 68	PBT	PBT	GN	YE	RK 4T-*	2
10-65 VDC	250	≤200	-25 to +70	IP 68	PBT	PBT	GN	YE	RK 4.4T-*	4

Wiring Diagrams

Diagram 1

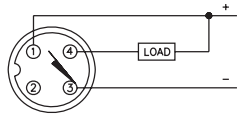

Diagram 2

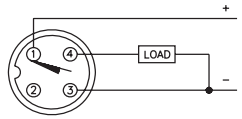

Diagram 3

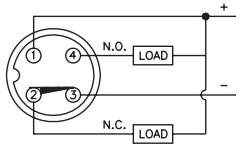

Diagram 4

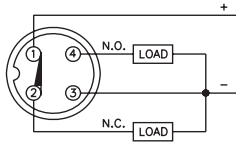

Diagram 5

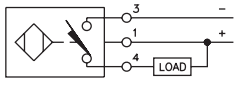

Diagram 6

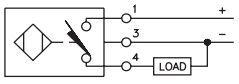

* Length in meters.

WIRING DIAGRAM



OUTPUT: AP6X2

SHORT-CIRCUIT AND OVERLOAD PROTECTED

SPECIFICATIONS

OPERATING VOLTAGE	10–30 VDC
RIPPLE	≤ 10%
DIFFERENTIAL TRAVEL (HYSTERESIS)	3–15% (5% TYPICAL)
VOLTAGE DROP ACROSS CONDUCTING SENSOR	≤ 1.8 V at 200 mA
OUTPUT FUNCTION	NORMALLY OPEN
TTL COMPATIBLE	NO
SHORT-CIRCUIT PROTECTED	YES
TRIGGER CURRENT FOR OVERLOAD PROTECTION	≥ 220 mA
CONTINUOUS LOAD CURRENT	≤ 200 mA
OFF-STATE (LEAKAGE) CURRENT	< 10 μ A
NO-LOAD CURRENT	4.0–9.5 mA
TIME DELAY BEFORE AVAILABILITY	≤ 80 ms
POWER-ON EFFECT PROTECTION	INCORPORATED
REVERSE POLARITY PROTECTION	INCORPORATED
WIRE-BREAK PROTECTION	INCORPORATED
PROTECTION AGAINST TRANSIENTS	EN 6047-5-2
OPERATING TEMPERATURE	–30°C to +85°C (–22°F to +185°F)
ENCLOSURE	MEETS NEMA 1, 3, 4, 6, 13 AND IEC IP67
SHOCK	30 g, 11 ms
VIBRATION	55 Hz, 1 mm AMPLITUDE (ALL 3 PLANES)
LED FUNCTION	YELLOW: OUTPUT ENERGIZED GREEN: POWER ON
SENSING RANGE	50 mm = 1.969" (NOMINAL)
SWITCHING FREQUENCY	250 Hz
REPEATABILITY	≤ 2% of RATED OPERATING DISTANCE

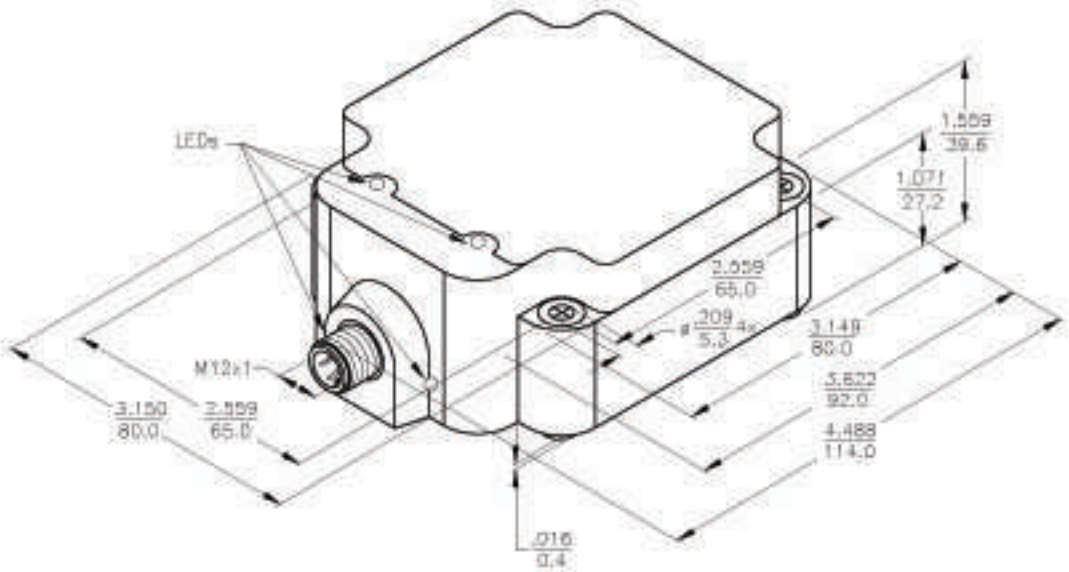

RELATED DOCUMENTS
1.
2.
3.
4.

3RD ANGLE PROJECTION

THIS DRAWING IS PROPERTY OF TURCK INC. USE OF THIS DOCUMENT WITHOUT WRITTEN PERMISSION IS PROHIBITED.

TURCK INC
High Technology Sensors and Automation Controls

MATERIAL
PBT-GF30-V0
PLASTIC

FINISH

TOLERANCES UNLESS OTHERWISE SPECIFIED
.X ±0.05
.XX ±0.01
.XXX ±0.005
ANGLES ±1°
ALL MILLIMETER DIMENSIONS ARE REFERENCE ONLY

DRT JBJ
DATE 04/04/00
DSGN
SCALE NONE

UNIT OF MEASUREMENT
INCH [MILLIMETER]
DO NOT SCALE THIS DRAWING

DESCRIPTION
Bi50U-Q80-AP6X2-H1141

IDENTIFICATION NO. M1608940
REV. B

FILE: M1608940
SHEET 1 OF 1

REV.	DESCRIPTION	BY	DATE	ECO NO.
B	UPDATE SWITCHING FREQUENCY	RDS	07/12/05	13410