PYRA® FUNCTION-MONITORED LED LIGHT
PY L-M-M



Function-monitored LED light for safety-critical applications.

- Function-monitored – The function-monitored PY L-M-M ensures more safety in sensitive applications where a signal must be sent to an external safety system, operating station or control centre in the event of a malfunction.
- Selectable signaling modes – continuous steady on, blinking light or flashing light.
- Selectable blink & flash frequencies – Adaptable to all your applications - select the frequency your gadget requires and boost the perceptibility.
- Multi-voltage-power supply – Plug and play - made to connect with different voltages. No need to stock various units - PYRA® LED adapts to most machines and applications no matter the voltage!
- Panel mount installation – Smart, modern and 360° visible - fully integrable into the design of your machine and equipment! The pyramid-shaped lens has ideal radiation characteristics and ensures all-round visibility.

IP 66 protection system

NEMA 4/4X protection system

IK08 impact-proof housing

+55 °C –40 °C operating temperature

brightness adjustable

10 Years warranty

EurAsian Conformity

UL UL approval

M12 connector (option)

3D-COVERAGE PERFORMANCE DATA	PY L-M-M
Indicate	38.7 x 43.2 x 44.1 m
Warn	17.2 x 19.2 x 19.6 m
Alarm	8.6 x 9.6 x 9.8 m

To determine the exact signaling area for your needs, please use the online available Pfannenberg Sizing Software PSS.

PRODUCT	PY L-M-M			
DATA				
Rated voltage	115 / 230 V AC	120 V DC	24 V AC	12–48 V DC
	50 | 60 Hz	–	50 / 60 Hz	–
Operating range	95–265 V	108–132 V	21.6–26.4 V	10–60 V
Current consumption (max)	18 mA @ 230 V AC	18 mA @ 120 V DC	80 mA @ 24 V AC	63 mA @ 24 V DC
Alarm output	max. 230V / 120 mA (AC/DC)			
Alarm output typ	pontential free, opens on error			
Operating mode internally selectable	continuous light / blinking light / flashing light			
Light alternation frequency	blinking light 1 Hz / 2 Hz | flashing light 0.1 Hz / 0.5 Hz / 0.75 Hz / 1 Hz / 2 Hz			
Light source	two high output LED			
Light intensity (DIN 5037) [1]	23 cd (reducible)			
Max. viewing distance	111 m			
Operating temperature	–40 °C ... +55 °C			
Storage temperature	–40 °C ... +70 °C			
Installation position	any			
Degree of protection	IP 66 (EN 60529), NEMA TYPE 4/4X, IK 08 (EN 62262)			
Service life of the light source	≥50,000 hrs			
Material – lens	⁄ ● ● ● ● ● polycarbonate (PC)			
Material – housing	PC / ABS blend			
Cable entry	4 x M20 pre-embossed			
Connecting terminal	0.14 - 2.5 mm² fine stranded			
Weight	400 g			

[1] with a clear lens

DIMENSIONS

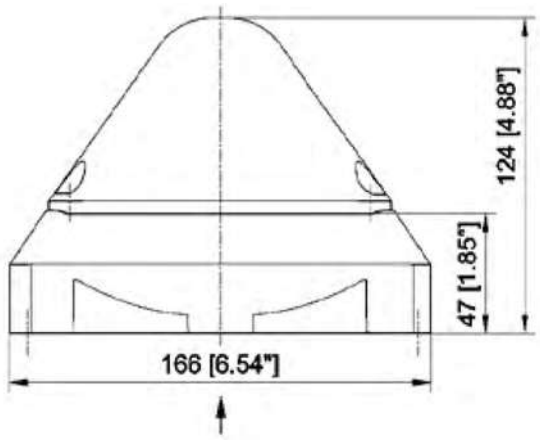

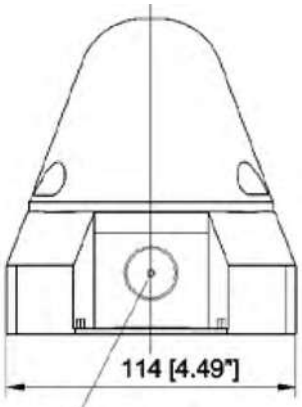

M20
cutout prepared (both sides)

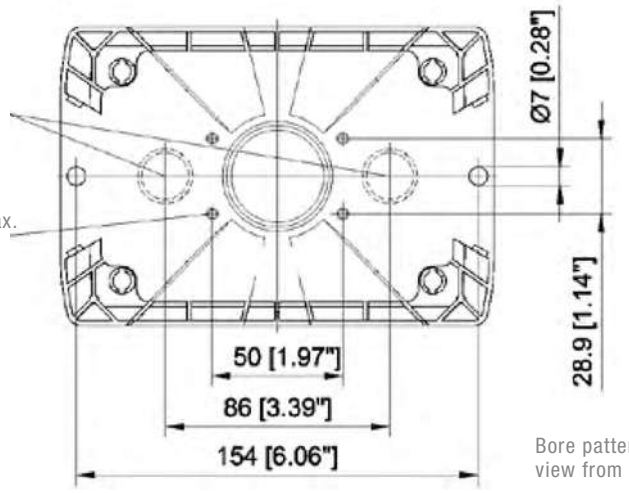

Bore pattern;
view from below

ARTICLE NO.		PY L-M-M	
HOUSING COLOUR	LENS COLOUR	115 / 230 V AC; 120 V DC	12-48 V DC
		21553643004	21553813004
		21553644004	21553814004
		21553645004	21553815004
		21553646004	21553816004

Article numbers for other colours and voltages on request.

OPTIONS / ACCESORIES

Sealing plug, 4-pack	28300000002
Spare locking bolt, 4-pack	28912000000
Surface seal	28111500000
Control panel installation kit	28112000019

Version with M12 connection on request

CONFORMITY TO STANDARDS

The visual characteristics of LED lights conform to the European standard DIN EN 842; **"Machine safety – visual alarm signals".**
Requirements contained in the DIN EN 981 standard; **"Machine safety – system of acoustic and visual alarm and information signals",** can be fulfilled.

The colours "red" for the emergency signal and "yellow" for the warning signal conform to the requirements of IEC 73 / DIN EN 60073 / VDE 0199; **"Coding of display devices and control elements using colours and supplementary means".**

References to visual alarm devices can be found in the following standards:

EN 60825-1	Radiation safety of laser devices, identical to IEC 825 and DIN-VDE 0837
DIN EN 54	Fire alarm systems
DIN 54113-2	Radiation protection regulations for the technical operation of X-ray equipment up to 500 kV