HRA101CE024

Slim electromechanical relay assembled on socket, 24VAC/DC, 6A, 1 C/O contact, screw terminals



Product designation			SLIM RELAY+SOCKET
Product type designation			HRA10
Contact characteristics			
Contact configuration			1 C/O
Rated insulation voltage Ui IEC/EN		V	250
Rated impulse withstand voltage Uimp		kV	4
IEC Conventional free air thermal current Ith		A	6
Maximum instantaneous current		A	20 (500ms)
Rated current (In)		A	6
Relay control voltage		V	24VAC/VDC
UL/CSA and IEC/EN 60947-5-1 designation			B300 – R300
UL rating			6A 277VAC; 6A 30VDC
Max contrallable power in			
	AC-1	W	1500
	AC-15	VA	360
Rated operating power AC-1			
		VA	1500
Rated operating power AC-15			
	230 VAC	VA	360
Single-phase motor control			
	230VAC	kW	0.186
Rated operating current DC-1			
	30V	A	6
	110V	A	0.2
	220V	A	0.12
Minimum switching load		V / mA	5 / 100
Contact impedance		mΩ	100
Contact material			Ag/Ni
Operating times			
Closing		ms	≤8
Opening		ms	≤4
Operations			
Mechanical life		cycles	10000000
Electrical life AC1		cycles	30000
Coil characteristics			
Relay control voltage + socket		V	24VAC/DC
Average coil consumption DC at 20°C		W	0.2
Operating range			
	Closing	% Un	≥75
	Opening	% Un	≥5
Maximum cycle frequency		cycles/h	10000
Mechanical features			
Max socket terminal tightening torque		Nm	0.5

The characteristics described in this document are subject to updates or modifications at any time. The descriptions, technical and functional information, illustrations and instructions in this brochure are purely illustrative, and are consequently not contractually binding

HRA101CE024

Slim electromechanical relay assembled on socket, 24VAC/DC, 6A, 1 C/O contact, screw terminals

Socket screw tightening tool (cross / flat blade)				PH0 / 3.5mm
Conductor section				
	AWG/Kcmil			
		min		20
		max		16
	IEC			
		min	mm²	0.5
		max	mm²	1.5
Operating position				
		normal		Any
Fixing				On 35mm DIN rail

Ambient conditions

Temperature				
	Operating temperature			
		min	°C	-40
		max	°C	+70
	Storage temperature			
		min	°C	-40
		max	°C	+80

Other features

Indication	Yes (on the socket)
Mechanical contact position indicator	No
Mechanical test actuator	No

Dimensions

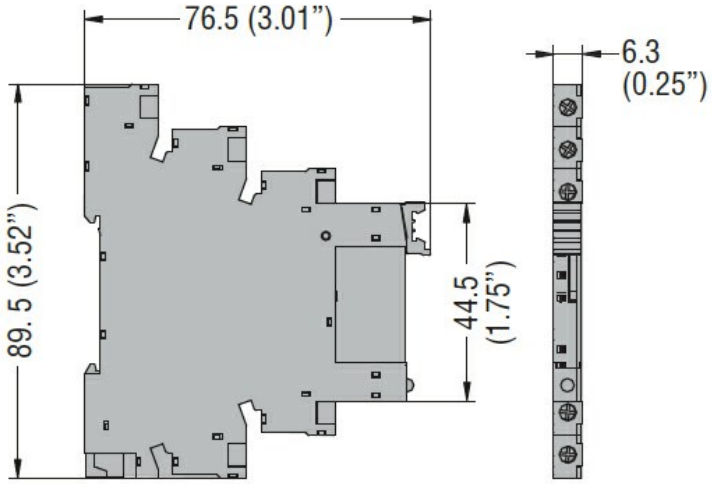

Wiring diagrams

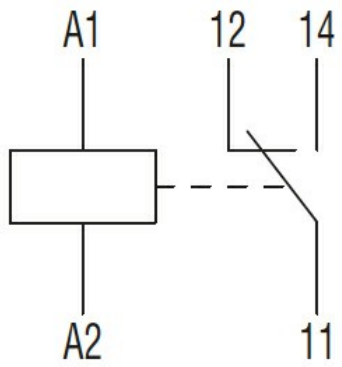

The characteristics described in this document are subject to updates or modifications at any time. The descriptions, technical and functional information, illustrations and instructions in this brochure are purely illustrative, and are consequently not contractually binding

HRA101CE024

Slim electromechanical relay assembled on socket, 24VAC/DC, 6A, 1 C/O contact, screw terminals

Certifications and compliance

Compliance	
	IEC/EN 61810
Certificates	
	cURus
	EAC
	VDE

ETIM classification

ETIM 8.0	EC001437 - Switching relay

The characteristics described in this document are subject to updates or modifications at any time. The descriptions, technical and functional information, illustrations and instructions in this brochure are purely illustrative, and are consequently not contractually binding