E10919

Wirable plug

SSTGF030MSSFKPG

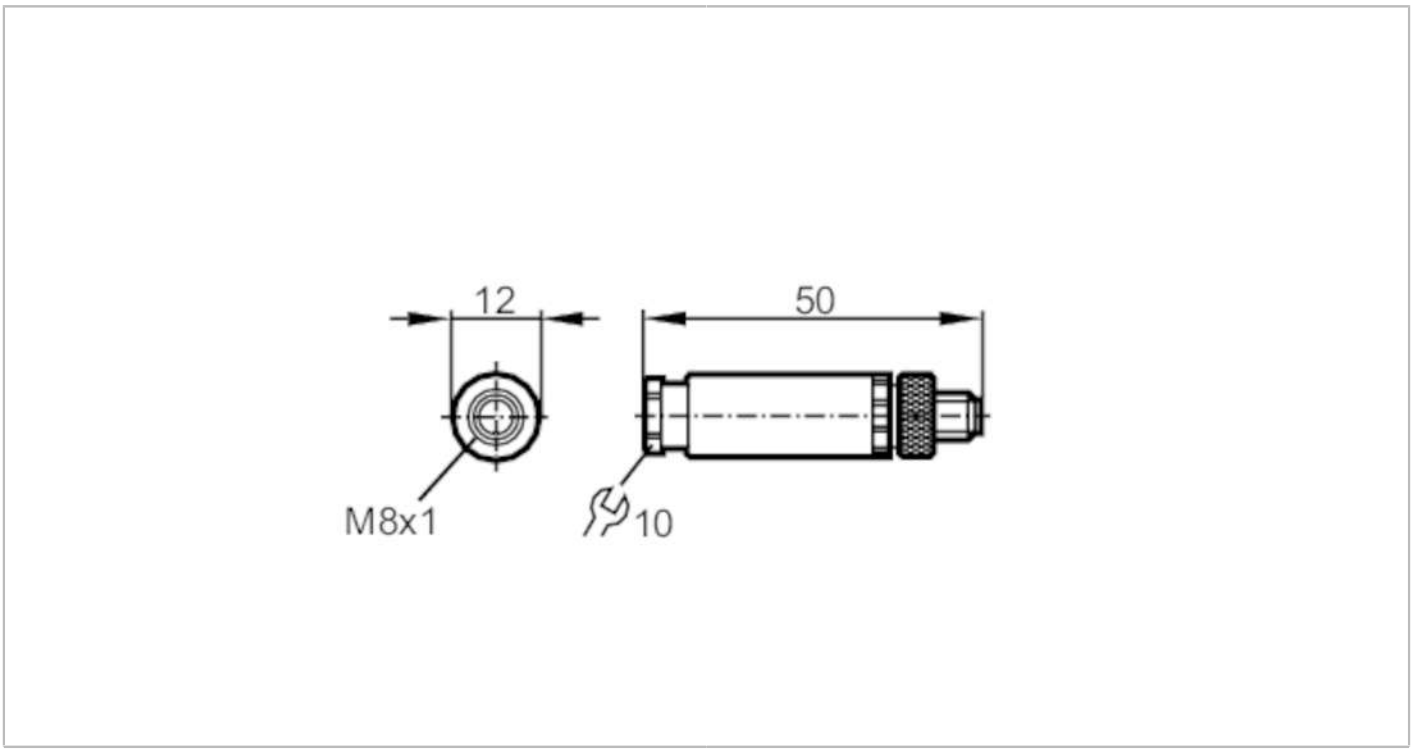

Application		
Special feature		Gold-plated contacts
Electrical data		
Operating voltage	[V]	< 60 DC
Outputs		
Electrical design		PNP
Operating conditions		
Ambient temperature	[°C]	-25...85
Protection		IP 67
Mechanical data		
Weight	[g]	10.7
Dimensions	[mm]	12 x 12 x 50
Materials		PA
Moulded-body material		PA
Material nut		brass, nickel-plated
Remarks		
Pack quantity		1 pcs.
Electrical connection		
screw terminals: 0.14...0.5 mm²; Cable sheath: Ø 3.5...5 mm		
Electrical connection - plug		
Connector: 1 x M8, straight; coding: A; Moulded body: PA; Locking: brass, nickel-plated; Contacts: gold-plated		

E10919

Wirable plug

SSTGF030MSSFKPG



Connection

