AL105NX Alarm Horn Sounder & Xenon Strobe Beacon

The AL105NX is the industry standard for combined audible and visual signalling. The high output 113dB(A) alarm horn sounder is combined with a 5 Joule, 200cd Xenon strobe beacon. CPR complaint, EN54-3 & EN54-23 tested and UL/cUL approved for private mode fire use. Featuring 64 alarm tone frequencies and 4 remotely activated stages/channels.

Globally approved for fire, marine and general applications the low current consumption and high SPL in a robust fire retardant enclosure ensure the AL105NX is suitable for all signalling applications including fire, security and process control. The alarm horn sounder & Xenon strobe beacon may be connected from a single or separate supplies for simultaneous or independent operation.

Features

- Automatic synchronisation
- Continuously rated
- Dual M20x1.5mm threaded cable entries – adaptors available
- Duplicate pluggable cable terminations – Class A
- Ingress protection IP66 Type 4/4X/13/3R
- 64 alarm tone frequencies and 4 remotely activated alarm stages
- Available with custom tone configurations and frequencies
- Diode polarized for use in supervised circuits

Approvals

- UL: UL464, UL464A, UL1638, UL1638A
- cUL: CSA C22.2 No 205-17
- ULC: CAN/ULC-S525 & CAN/ULC-S526
- UL EU: (EN54-3 & EN54-23) UL-EU-01154-CPR
- CPR 305/2011: 2821-CPR-0109
- MED 2020/1170: MEDB000074G
- DNV GL-CG-0339: TAA00002ZU
- EAC CU TR 043/2017: B.00291/21
- EAC: RU D-GB.GA05.B.12595-20
- RMRS Marine: No. 19.00193.278
- CE, UKCA





Specification

Alarm Horn:	
Maximum output:	113dB(A) @ 1 m ±3dB [104dB(A) @ 10ft/3m ±3dB]
Nominal output:	106dB(A) @ 1m ±3dB [97dB(A) @ 10ft/3m ±3dB]
No. of tones:	64 (UKOOA / PFEER compliant)
No. of stages:	4
Volume control:	-12dB(A) tone dependent
Effective range:	58m/190ft @ 1KHz
In rush:	636mA within 4.0ms @ 24Vdc
Stage switching:	Negative (common positive)
Xenon Strobe:	
Energy:	5 Joules(5Ws)
Flash rate:	1Hz (60 fpm) DC units: 1.5Hz (90 fpm) & Double strike
Peak Candela:	500,000 cd – calculated from energy (J)
Effective cd:	250 cd – calculated from energy (J)
Peak Candela:	86,935 cd* – measured ref. to I.E.S.
Effective cd:	200 cd* – measured ref. to I.E.S.
Tube life:	Emissions may reduce to 70% after 8 million flashes
General:	
Ingress protection:	IP66 Type 4/4X/13/3R
Enclosure:	High impact UL94 V0 & 5VA FR ABS/PC
Lens colour filter:	Field replaceable UV stable PC
Terminals:	0.5 – 2.5mm² (20-14 AWG)
Line monitoring:	Diode polarized for use in supervised circuits
Operating:	-40 to +66°C [-40° to +151°F]
Storage:	-40 to +70°C [-40° to +158°F]
Relative humidity:	95% at 20°C [68°F]
Vibration test:	35Hz for a duration 4Hr (UL464/UL1638)
Jarring test:	3ft/lb Energy (UL464/UL1638)
Impact test:	3x 5lb (UL464/UL1638)
MTBF DC:	114.79 years / 1,005,530 hours – MIL 217
MTBF AC:	86.29 years / 755,857 hours – MIL 217
Weight DC:	0.95kg / 2.10lbs
Weight AC:	1.20kg / 2.64lbs

Part Codes

Variable:	Identifier:	Description:
Product type:	AL105NX	Combined alarm horn sounder & Xenon strobe
Voltage:	DC012	12Vdc (11.5-14Vdc)
	DC024	24Vdc (20-28Vdc)
	DC048	48Vdc (42-54Vdc)
	AC024	24Vac 50/60Hz
	AC048	48Vac 50/60Hz
	AC115	115Vac 50/60Hz
	AC230	230Vac 50/60Hz
Back box/cable entries: [e]	A	Back box with mounting lugs – 2 x M20x1.5mm entries
	B	Back box with mounting lugs – 2 × 1/2"NPT (adaptors)
Stopping plug material: [m]	A	ABS
Equip. tag/Duty label: [s]	0	No equip. tag or Duty label
	1	316 (A4) St/St Equip. tag/Duty label
	2	Metalised Polyester Equip. tag/Duty label
Product version: [v]	A	UL/cUL, CPR, MED, DNV, RMRS, EAC, CE, UKCA
Product option: [o]	1	Standard product
	X	Custom configuration – contact E2S
	Z	Custom alarm tone software – contact E2S
Enclosure colour: [x]	R	Red
	G	Grey
Lens colour: [y]	A	Amber
	B	Blue
	C	Clear
	G	Green
	M	Magenta
	R	Red
	Y	Yellow

Current Consumption

Product Version:	Nominal Voltage:	Voltage Range:	Beacon Current:	Horn Current:
DC012	12Vdc	11.5-14Vdc	341mA	17mA
DC024	24Vdc	20-28Vdc	250mA	33.5mA
DC048	48Vdc	42-54Vdc	170mA	113mA
AC024	24Vac	24-28Vac 50/60Hz	300mA	42.5mA
AC048	48Vac	±10% 50/60Hz	250mA	42.5mA
AC115	115Vac	±10% 50/60Hz	70mA	25mA
AC230	230Vac	±10% 50/60Hz	35mA	17mA

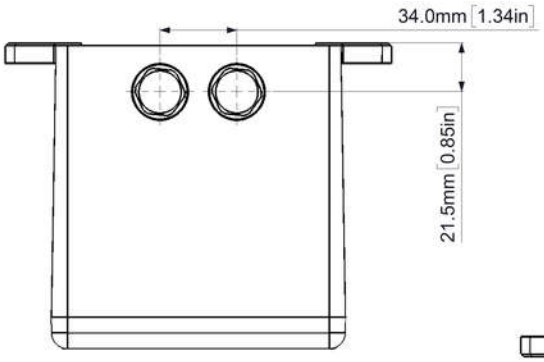

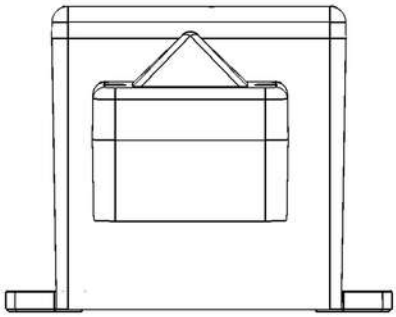

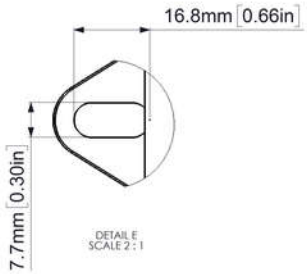

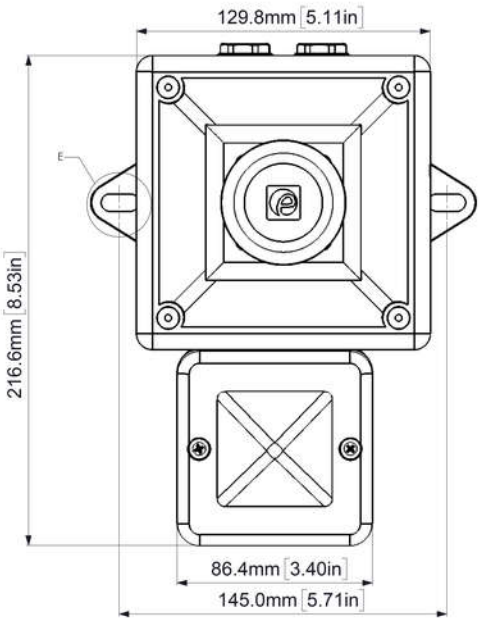

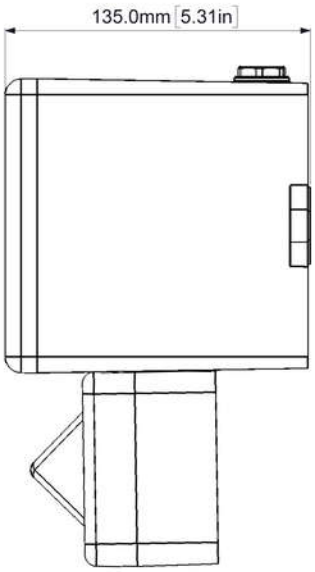

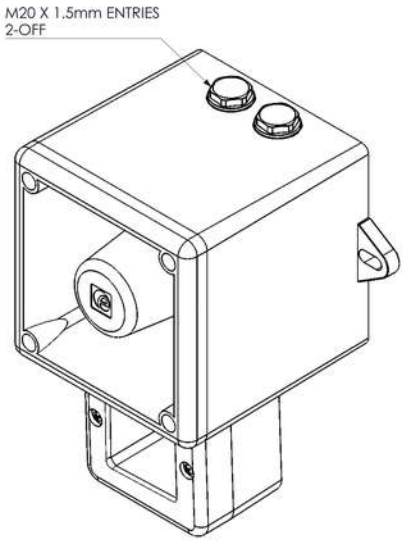

Tone table

S 1	Description	S 2	S 3	S 4
T 1	1000 Continuous - PFEER Toxic Gas	Any	T 2	T 44
T 2	1200/500 @ 1Hz Sweeping - DIN / PFEER P.T.A.P.	Any	T 3	T 44
T 3	1000 @ 0.5Hz (1s on, 1s off) Intermittent - P...	Any	T 2	T 44
T 4	1.4KH-1.6KHz 1s, 1.6KHz-1.4KHz 0.5s - NF C 48...	Any	T 24	T 1
T 5	544(100mS)/440 (400mS) - NF S 32-001	Any	T 19	T 1
T 6	1500/500 - (0.5s on , 0.5s off) x3 + 1s gap -...	Any	T 44	T 1
T 7	500-1500Hz Sweeping 2 sec on 1 sec off - AS4428	Any	T 44	T 1
T 8	500/1200Hz @ 0.26Hz(3.3s on, 0.5s off) - NEN ...	Any	T 24	T 35
T 9	1000 (1s on, 1s off)x7 + (7s on, 1s off) - IM...	Any	T 34	T 1
T 10	1000 (1s on, 1s off)x7 + (7s on, 1s off) - IM...	Any	T 34	T 1
T 11	420(0.5s on, 0.5s off)x3 + 1s gap - ISO 8201 ...	Any	T 1	T 8
T 12	1000(0.5s on, 0.5s off)x3 + 1s gap - ISO 8201...	Any	T 1	T 8
T 13	422/775 - (0.85 on, 0.5 off) x3 + 1s gap - ...	Any	T 1	T 8
T 14	1000/2000 @ 1Hz - Singapore	Any	T 3	T 35
T 15	300 Continuous	Any	T 24	T 35
T 16	440 Continuous	Any	T 24	T 35
T 17	470 Continuous	Any	T 24	T 35
T 18	500 Continuous - IMO code 2 (Low)	Any	T 24	T 35
T 19	554 Continuous	Any	T 24	T 35
T 20	660 Continuous	Any	T 24	T 35
T 21	800 Continuous - IMO code 2 (High)	Any	T 24	T 35
T 22	1200 Continuous	Any	T 24	T 35
T 23	2000 Continuous	Any	T 3	T 35
T 24	2400 Continuous	Any	T 20	T 35
T 25	440 @ 0.83Hz (0.60s on, 0.60s off) Intermittent	Any	T 44	T 8
T 26	470 @ 0.9Hz (0.55s on, 0.55s off) Intermittent	Any	T 44	T 8
T 27	470 @ 5Hz (0.10s on, 0.10s off) Intermittent	Any	T 44	T 8
T 28	544 @ 1.14Hz (0.43s on, 0.44s off) Intermittent	Any	T 24	T 8
T 29	655 @ 0.875Hz (0.57s on, 0.57s off) Intermittent	Any	T 44	T 8
T 30	660 @ 0.28Hz (1.80s on, 1.80s off) Intermittent	Any	T 24	T 8
T 31	660 @ 3.3Hz (0.15s on, 0.15s off) Intermittent	Any	T 24	T 8
T 32	745 @ 1Hz (0.50s on, 0.50s off) Intermittent	Any	T 24	T 8
T 33	800 (0.25s on, 1.00s off) Intermittent	Any	T 24	T 8
T 34	800 @ 2Hz (0.25s on, 0.25s off) - IMO code 3....	Any	T 24	T 8
T 35	1000 @ 1Hz (0.50s on, 0.50s off) Intermittent	Any	T 24	T 8
T 36	2400 @ 1Hz (0.50s on, 0.50s off) Intermittent	Any	T 24	T 8
T 37	2900 @ 5Hz (0.10s on, 0.10s off) Intermittent	Any	T 24	T 8
T 38	363/518 @ 1Hz (0.50s / 0.50s) Alternating	Any	T 8	T 19
T 39	450/500 @ 2Hz (0.25s / 0.25s) Alternating	Any	T 8	T 19
T 40	554/440 @ 1Hz (0.50s / 0.50s) Alternating	Any	T 24	T 19
T 41	554/440 @ 0.65Hz (0.76s / 0.76s) Alternating	Any	T 8	T 19
T 42	561/760 @ 0.83Hz (0.60s / 0.60s) Alternating	Any	T 8	T 19
T 43	780/600 @ 0.96Hz (0.52s / 0.52s) Alternating	Any	T 8	T 19
T 44	800/1000 @ 2Hz (0.25s / 0.25s) Alternating	Any	T 24	T 19
T 45	970/800 @ 2Hz (0.25s / 0.25s) Alternating	Any	T 8	T 19
T 46	800/1000 @ 0.875Hz (0.57s / 0.57s) Alternating	Any	T 24	T 19
T 47	2400/2900 @ 2Hz (0.25s / 0.25s) Alternating	Any	T 24	T 19
T 48	500/1200 @ 0.3Hz (1.67s / 1.67s) Sweeping	Any	T 24	T 12
T 49	560/1055 @ 0.18Hz (2.73s / 2.73s) Sweeping	Any	T 24	T 12
T 50	560/1055 @ 3.3Hz (0.15s / 0.15s) Sweeping	Any	T 24	T 12
T 51	600/1250 @ 0.125Hz (4s / 4s) Sweeping	Any	T 24	T 12
T 52	660/1200 @ 1Hz (0.50s / 0.50s) Sweeping	Any	T 24	T 12
T 53	800/1000 @ 1Hz (0.50s / 0.50s) Sweeping	Any	T 24	T 12
T 54	800/1000 @ 7Hz (0.07s / 0.07s) Sweeping	Any	T 24	T 12
T 55	800/1000 @ 50Hz (0.01s / 0.01s) Sweeping	Any	T 24	T 12
T 56	2400/2900 @ 7Hz (0.07s / 0.07s) Sweeping	Any	T 24	T 12
T 57	2400/2900 @ 1Hz (0.50s / 0.50s) Sweeping	Any	T 24	T 12
T 58	2400/2900 @ 50Hz (0.01s / 0.01s) Sweeping	Any	T 24	T 12
T 59	2500/3000 @ 2Hz (0.25s / 0.25s) Sweeping	Any	T 24	T 12
T 60	2500/3000 @ 7.7Hz (0.65s / 0.65s) Sweeping	Any	T 24	T 12
T 61	800Hz Motor Siren	Any	T 24	T 12
T 62	1200Hz Motor Siren	Any	T 24	T 12
T 63	2400Hz Motor Siren	Any	T 24	T 12
T 64	Simulated Bell	Any	T 21	T 12

No liability is accepted for any consequence of the use of this document. The technical specification of this unit is subject to change without notice due to our policy of continual product development. All dimensions are approximate. This unit is sold subject to our standard conditions of sale, a copy of which is available on request.