HRTR 318 Diffuse reflection light scanner with background suppression

en 06-2014/07 50108673-01



1 … 140mm

10 - 30 V DC

HF A²LS

- Exact background suppression, electronically adjustable
- Nearly colour-independent object detection
- Clearly visible red light spot
- High switching frequency for detection of fast events
- A²LS - Active Ambient Light Suppression
- Very short, robust cylindrical stainless steel or plastic housing with straight optics

IEC 60947...

IEC 60947...

IP 67

Accessories:

(available separately)

- Mounting systems (BT 318, BT 318-ARH)
- M12 connectors (KD …)
- Ready-made cables (K-D …)

Dimensioned drawing

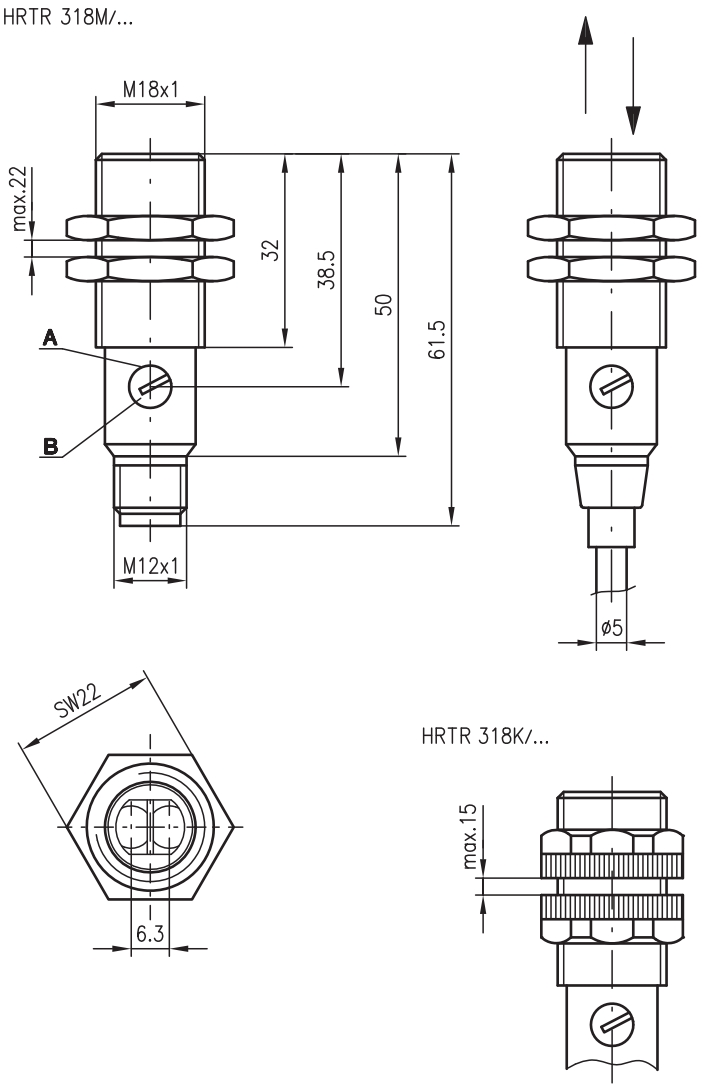

A Indicator diode
B Sensitivity adjustment

Electrical connection

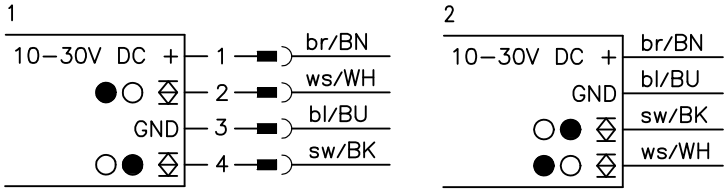

We reserve the right to make changes • DS_HRTR318_en_50108673_01.fm

Specifications

Optical data

Typ. scanning range limit (white 90 %) [1]		1 … 140 mm
Scanning range [2]		see tables
Adjustment range		40 … 140 mm
Light source		LED (modulated light)
Wavelength		625 nm (visible red light)

Timing

Switching frequency		1000 Hz
Response time		0.5 ms
Delay before start-up		≤ 100 ms

Electrical data

Operating voltage U_B [3]		10 … 30 VDC
Residual ripple		≤ 10 % of U_B
Bias current		≤ 15 mA
Switching output	…/66. …	2 push-pull switching outputs [4] pin 2: PNP dark switching, NPN light switching pin 4: PNP light switching, NPN dark switching
Signal voltage high/low		≥ (U_B-2V)/≤ 2V
Output current		max. 100 mA
Scanning range adjustment		potentiometer, 270°

Indicators

LED yellow	object detected

Mechanical data

Housing	polyamide 12 or stainless steel
Optics cover	polycarbonate
Weight	plastic housing: 85 g (cable), 15 g (M12) stainless steel housing: 105 g (cable), 35 g (M12)
Connection type	M12 connector, 4-pin cable 2 m, 4 x 0.25 mm²

Environmental data

Ambient temp. (operation/storage)	-25 °C … +65 °C/-40 °C … +70 °C
Protective circuit [5]	2, 3
VDE safety class [6]	II, all-insulated
Protection class	IP 67
Light source	exempt group (in acc. with EN 62471)
Standards applied	IEC 60947-5-2
Certifications	UL 508, C22.2 No.14-13 [4] [7]

1) Typ. scanning range limit: max. attainable range without performance reserve
2) Scanning range: recommended range with performance reserve
3) For UL applications: for use in class 2 circuits according to NEC only
4) The push-pull switching outputs must not be connected in parallel
5) 2=polarity reversal protection, 3=short-circuit protection for all outputs
6) Rating voltage 250 VAC
7) These proximity switches shall be used with UL Listed Cable assemblies rated 30V, 0.5A min, in the field installation, or equivalent (categories: CYJV/CYJV7 or PVVA/PVVA7)

Tables

1	1	120	140
2	5	110	130
3	8	100	120

1	white 90 %
2	grey 18 %
3	black 6 %

Scanning range [mm]
Typ. scanning range limit [mm]

Diagrams

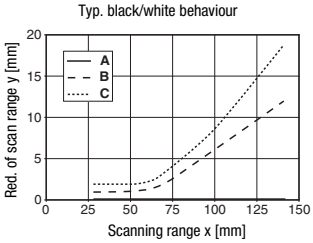

A white 90 %
B grey 18 %
C black 6 %

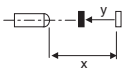

Order guide

Selection table Equipment ↓	Order code →	HRTR 318K/66-120-S12 Part No. 50106085	HRTR 318M/66-120-S12 Part No. 50106086	HRTR 318K/66-120 Part No. 50106089	HRTR 318M/66-120 Part No. 50106090				
Housing	plastic	●		●					
	stainless steel		●		●				
Connection	M12 connector	●	●						
	cable			●	●				
Switching output	2 x push-pull	●	●	●	●				
Connection diagram		1	1	2	2				

Remarks

Intended use:
The diffuse reflection light scanners are optical electronic sensors for optical, contactless detection of objects.

Operate in accordance with intended use!

- This product is not a safety sensor and is not intended as personnel protection.
- The product may only be put into operation by competent persons.
- Only use the product in accordance with the intended use.