

Model Number

NBB8-18GM60-US

Features

- **8 mm embeddable**
- **2-wire AC/DC**

Connection

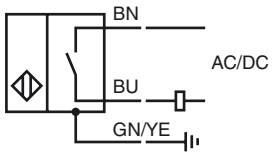

Accessories

EXG-18
Quick mounting bracket with dead stop

Dimensions

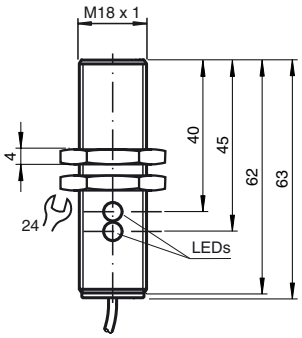

Technical Data

General specifications		
Switching element function		AC/DC NO
Rated operating distance	s_n	8 mm
Installation		embeddable
Output polarity		AC/DC NO
Reduction factor r_{Al}		0.45
Reduction factor r_{Cu}		0.4
Reduction factor r_{303}		0.7
Nominal ratings		
Operating voltage	U_B	20 ... 250 V AC/20 ... 300 V DC
Switching frequency	f	30 Hz
Hysteresis	H	3 ... 15 typ. 5 %
Reverse polarity protected		tolerant
Short-circuit protection		yes
Voltage drop	U_d	≤ 8 V
Operating current	I_L	4 ... 300 mA AC/DC
Off-state current	I_r	≤ 0.8 mA
Operating voltage display		LED, green
Indication of the switching state		LED, yellow
Ambient conditions		
Ambient temperature		-25 ... 70 °C (-13 ... 158 °F)
Mechanical specifications		
Connection type		cable PUR , 2 m
Core cross-section		0.5 mm^2
Housing material		brass, nickel-plated
Sensing face		PBT
Protection degree		IP67
Compliance with standards and directives		
Standard conformity		
Standards		EN 60947-5-2:2007 IEC 60947-5-2:2007
Approvals and certificates		
UL approval		cULus Listed, General Purpose
CSA approval		cCSAus Listed, General Purpose
CCC approval		Certified by China Compulsory Certification (CCC)

Release date: 2011-07-14 15:43 Date of issue: 2011-07-14 198076_eng.xml

Subject to modifications without notice
Copyright Pepperl+Fuchs