# Covers for OGN, OGN-SMD

Cover for Holder OGN, OGN-SMD



4W/10A

## Standards
- IEC 60127-6 Edition 2.0
- UL 4248-1 / UL 512
- CSA C22.2 no. 39

## Approvals
- VDE Certificate Number: 4001042
- UL File Number: E39328

## References
Mating cover to OGN; OGN-SMD

## Weblinks
pdf datasheet, html-datasheet, General Product Information, Packaging details, Approvals, CE declaration of conformity, RoHS, CHINA-RoHS, REACH, Distributor-Stock-Check, Detailed request for product, Microsite

## Technical Data

| | |
|---|---|
| Fuse-Link | 5 x 20 mm |
| Rated Power Acceptance IEC | 4 W / 10 A @ Ta 23 °C<br>2.5 W / 10 A with transparant cover, see derating curves |
| Admissible Ambient Air Temp. | -40 °C to 85 °C |
| Material: Cover | Thermoplastic UL 94V-0 |
| Storage Conditions | 0 °C to 60 °C, max. 70% r.h. |

| | |
|---|---|
| Contact Resistance | < mΩ at 20 mV |

Detailed information on product approvals, code requirements, usage instructions and detailed test conditions can be looked up in General Product Information

## Dimension [mm]

25 mm

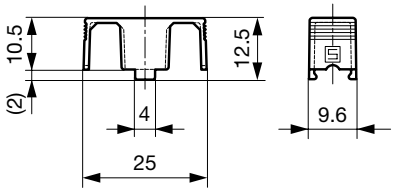


Variants 0853.0551, 0853.0571, 0853.0573 and 0853.0575

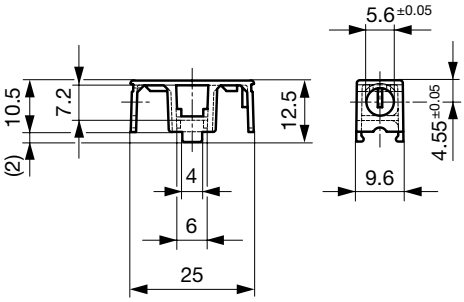


Variant 0853.0576

## All Variants

| Description | Order Number | |
|---|---|---|
| Transparent Cover (not for reflow) | 0853.0551 | ■ |
| Reflow-Cover | 0853.0571 | ■ |
| Reflow-Cover, meets IEC 60335-1 | 0853.0573 | ■ |
| Cover, black, meets IEC 60335-1 Ed. 4.0 | 0853.0575 | |
| Reflow-Cover with Clamp | 0853.0576 | ■ |

■ Most Popular.

| Description | Order Number |
|---|---|

Availability for all products can be searched real-time:http://www.schurter.com/en/Stock-Check/Stock-Check-SCHURTER

| | |
|---|---|
| **Packaging Unit** | Bulk (100 pcs.) |

08.06.2017



The specifications, descriptions and illustrations indicated in this document are based on current information. All content is subject to modifications and amendments. Information furnished is believed to be accurate and reliable. However, users should independently evaluate the suitability and test each product selected for their own applications.

# Mouser Electronics

Authorized Distributor

Click to View Pricing, Inventory, Delivery & Lifecycle Information:

Schurter:
0853.0571