EUROSENSOR

EURO-CMRK PROGRAMMABLE SENSOR
CUSTOM MICRO ROTARY PUCK



- **Puck and magnet design**
- **Hall Effect non-contacting technology**
- **Long life - extremely robust**
- **Programmable angles from 30° up to 360°**
- **IP68 protection**
- **Redundant output**
- **Customisable housing**

Based on the Euro-XPK the Euro-CMRK angle sensor is specifically aimed applications where miniaturisation is a key factor. The main sensor housing is manufactured from high grade aluminium alloy with an anodised finish and may be customised to exactly suit the application. The Euro-CMRK series' housing and magnet accessory dimensions are fully customisable dependant on customers' requirements. With redundant output this compact and fully non-contacting Hall Effect sensor features IP68 sealing and will suit arduous high-duty cycle position feedback applications.

Specifications	
Mechanical	
Typical Life Cycle	In excess of 100 million cycles
Measuring range	360° redundant, signal 1 cw, signal 2 ccw
Housing	High grade anodised aluminium
Recom. Mounting Bolt Torque	0.5- 0.63 Nm (may differ dependant on application)
Environmental	
Operating temperature	-40°C to +125°C (Short term 150°C)
Vibration	20...2000 Hz; Amax = 0.75 mm; amax = 31.4 g to IEC 60068-2-6
IP rating	IP68
Electrical	
Supply Voltage	5V +/- 0.5V
Output signal	Ratiometric 5%...95% of supply (+/-25mv of specified electrical output range for both start & end voltage) PWM frequency 100Hz... 1000Hz, 1000Hz default, duty cycle between 5%-95%
Independant linearity	+/- 0.5% of each signal range
Sampe Rate (Fast Mode)	5 kHz
System Propagation Dela (Fast Mode)	600 µs
Isolation resistance	200 MΩ (500 VDC, 1 bar, 2s)
Electrical connection	See ordering code/wiring daigram
Cable type	Raychem Spec 55, 24 AWG

EURO-CMRK PROGRAMMABLE SENSOR
CUSTOM MICRO ROTARY PUCK

Dimensions

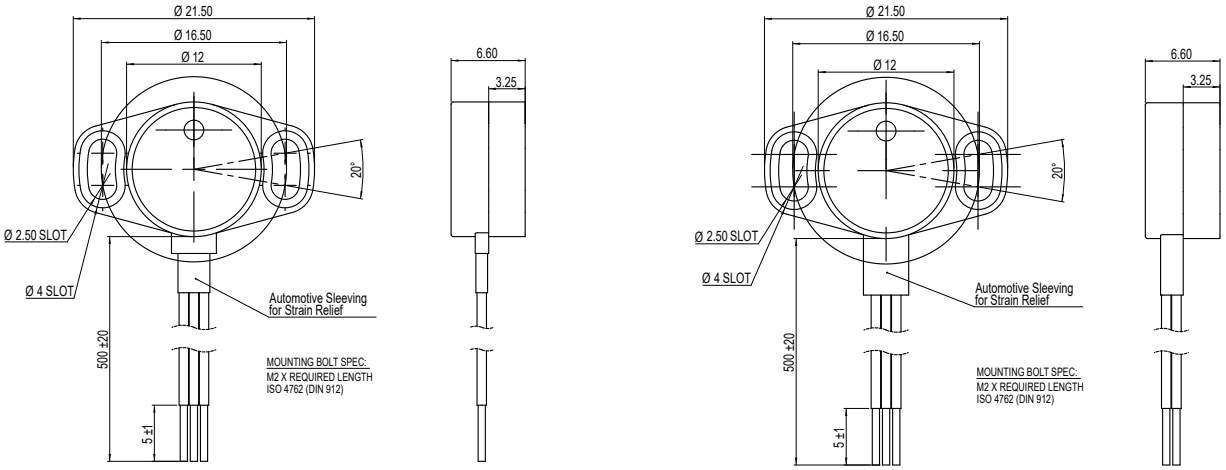

Wiring and orientation

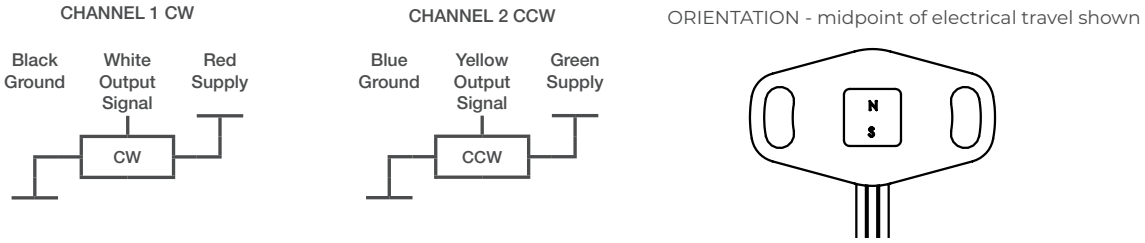

Magnet options - dimensions in mm

Magnet Code	Magnet Type	Distance from CMRK face
A	No magnet	
B	5x5x2 magnet	0.5 - 3 mm
C	M4 magnet	0 - 2 mm
D	Micro plug magnet	0 - 2 mm
E	M2 Female magnet	0 - 2,5 mm
X	Custom - on request	-

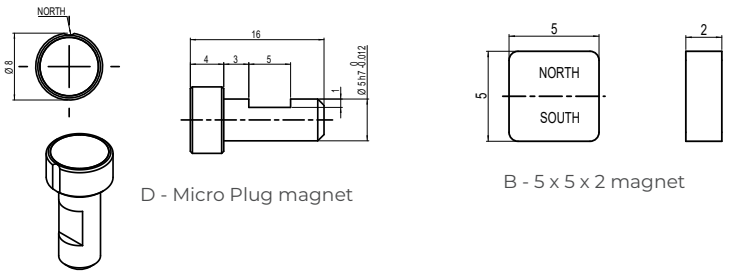

D - Micro Plug magnet

B - 5 x 5 x 2 magnet

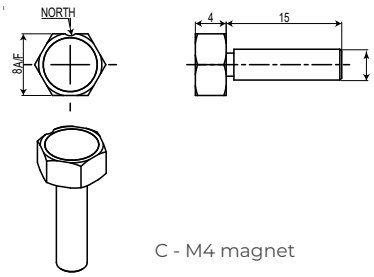

C - M4 magnet

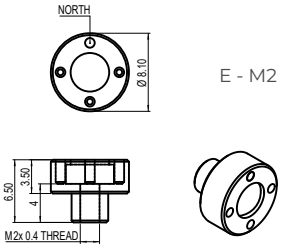

E - M2 Female magnet

Note for magnets: Maximum permitted radial offset = +/- 0.75 mm

EURO-CMRK PROGRAMMABLE SENSOR
CUSTOM MICRO ROTARY PUCK

Ordering information

(Please use the characters in the chart below to construct your product code)

Sample Code Euro-CMRK - X - 1 1 1 - 1216 - 360 - 11 78 - 50

Series

(Euro- **C**ustom **M**icro **R**otary **P**uck)

Accompanying magnet

A	No magnet
B	5x5x2 magnet
C	M4 magnet
D	Micro Plug magnet
E	M2 female magnet
X	Custom - on request

Input type

1...5 V supply

Output type

1	Analog ratiometric
2	PWM

Number of channels

1	Single channel
2	Dual channel

Mounting flange PCD

16	16.5 mm PCD
XX	Custom on request

Electrical angle

360	Standard Electrical Angle 360°

Optional Angle from 30° to 360° in 1° steps (e.g. 181=181°)

Output signal

1	5% to 95% of Input Voltage
2	10% to 90% of Input Voltage
3	Custom on request e.g. 11 = 5 to 95% both channels

Channel direction

7	Clockwise
8	Counter clockwise

e.g. 77 = Clockwise both channels

Cable length

50	Standard cable length 500 mm
XX	Custom on request <1 metre
XXX	Custom on request >1 metre

(Standard cable Raychem Spec 55, 24 AWG; Others available on request)

The following sensor models are available as standard products:

95081 Euro-CMRK-A-111-1216-180-17-50
95287 Euro-CMRK-A-112-1216-360-1178-50
95288 Euro-CMRK-A-112-1216-060-1178-50
95289 Euro-CMRK-A-112-1216-120-1178-50
94797 Euro-CMRK-B-111-1216-360-17-50
94780 Euro-CMRK-A-111-1216-360-17-50

The following magnets are available as standard products:

17962 B-5x5x2 Magnet
94385 C-M4 Magnet
94386 D-Mikro Plug Magnet
94387 E - M2 Female Magnet