View product details on medias

11.07.2025, 12:47:50 IST

SCHAEFFLER



FAG

SNS3036-H-D

Plummer block housing

Plummer block housing, split, for spherical roller bearings, metric and inch size shaft diameters, for grease lubrication

Technical information

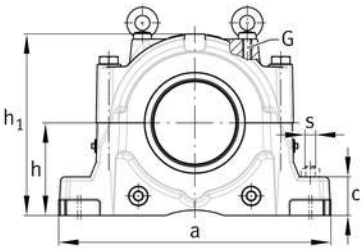

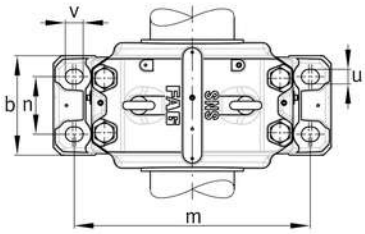

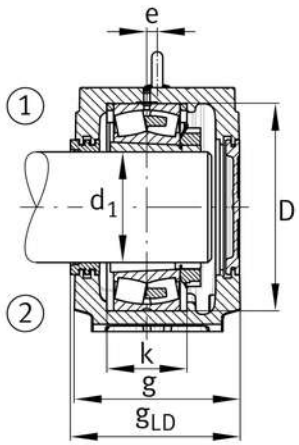

Your current product variant

Material	D	Spheroidal graphite cast iron

Main Dimensions & Performance Data

h_1	333 mm	Housing height
g	230 mm	Housing width
a	510 mm	Length base
≈m	73.6 kg	Weight

Dimensions

c	70 mm	Base height
b	180 mm	Base width
n_2	100 mm	Base hole distance 2
D	280 mm	Bearing seat
e	14 mm	Center offset
h	170 mm	Center height
k	108 mm	Bearing seat width
m	430 mm	Base hole distance 1
s	M24	Screw size base hole fixing
u	28 mm	Base hole width
v	34 mm	Base hole length

The data sheet only contains an overview of the technical data of the selected product. Please refer to the additional documentation for this product. For further information, please use the following link on our website: Contact form

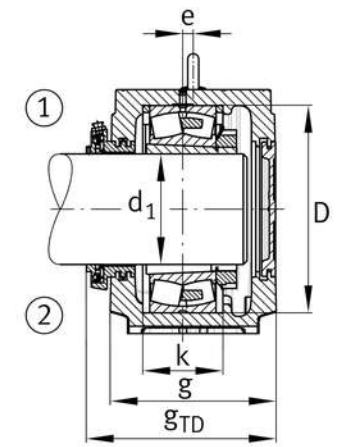

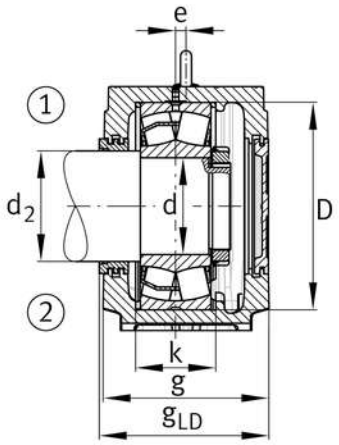

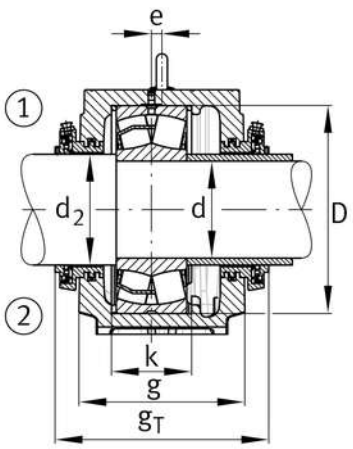

The data sheet only contains an overview of the technical data of the selected product. Please refer to the additional documentation for this product. For further information, please use the following link on our website: Contact form