Product data sheet
Characteristics

XUSL4E4BB091N
XUSL type 4 - Body protection - Std sensing range - 4 Beams, Hp = 910 mm

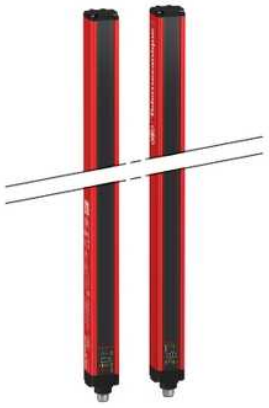

Main

Range of product	Preventa Safety detection
Product or component type	Safety light curtain type 4
Device short name	XUSL4E
Output type	2 safety outputs OSSD solid-state PNP (integrated arc suppression)
Product specific application	For body protection
[Sn] nominal sensing distance	0...4 m by cabling 0...12 m by cabling
[Hp] Height protected	910 mm
Number of beams	4
Space between beams	300 mm
Type of start / restart	Automatic Manual
External Device Monitoring (EDM)	Selected by wiring

Complementary

Detection system	Transmitter-receiver system
Response time	3 ms
Kit composition	1 user guide with certificate of conformity on CD-ROM 1 transmitter(s) 1 receiver(s) Adjustable mounting bracket(s)
[EAA] effective aperture angle	+/- 2.5 ° at 3 m
Emission	IR LED (λ = 950 nm)
[Us] rated supply voltage	24 V DC (+/- 20 %)
Supply	Power supply must meet requirements of IEC 60204-1 Power supply must meet requirements of IEC 61496-1
[Ie] rated operational current	2 A
Current consumption	900 mA with maximum load (receiver) 42 mA (transmitter) 83 mA no-load (receiver) 42 mA no-load (transmitter)
Output current limits	0.4 A for safety outputs OSSD
Output voltage	24 V
Output circuit type	DC
Voltage drop	<= 0.5 V
Local signalling	2 dual colour LEDs (receiver) 1 multi-colour LED (transmitter)
Electrical connection	1 male connector M12 8 pins (receiver) 1 male connector M12 5 pins (transmitter)
Function available	LED display of operating modes and faults Muting through external safety module XPSLCMUT1160 Test
Marking	CE
Material	End caps : polypropylene Front panel : polycarbonate Casing : aluminium
Housing colour	RAL 3000 : red

The information provided in this documentation contains general descriptions and/or technical characteristics of the performance of the products contained herein.
This documentation is not intended as a substitute for and is not to be used for determining suitability or reliability of these products for specific user applications.
It is the duty of any such user or integrator to perform the appropriate and complete risk analysis, evaluation and testing of the products with respect to the relevant specific application or use thereof.
Neither Schneider Electric Industries SAS nor any of its affiliates or subsidiaries shall be responsible or liable for misuse of the information contained herein.

Fixing mode	By fixing brackets
Product weight	1.7 kg
Offer type	Standard distance

Environment

Directives	89/336/EEC - electromagnetic compatibility 2002/96/EC - WEEE directive 2002/95/EC - RoHS directive 98/37/EEC - machinery 89/655/EEC - work equipment
Product certifications	CE CULus TÜV
Safety level (correctly wired)	PL = e conforming to EN/ISO 13849-1 Category 4 conforming to EN/ISO 13849-1 SILCL 3 conforming to IEC 62061 SIL 3 conforming to IEC 61508 Type 4 conforming to IEC 61496-1
Optical characteristic	Resistance to light disturbance conforming to EN/IEC 61496-2
Mission time	20 yr
Safety reliability data	PFHd = 8.21E-9 1/h conforming to IEC 61508
Ambient air temperature for operation	-10...55 °C 14...131 °F
Ambient air temperature for storage	-25...70 °C -13...158 °F
Relative humidity	<= 95 % without condensation
IP degree of protection	IP67 IP65
Shock resistance	10 gn for 16 ms conforming to IEC 61496-1
Vibration resistance	0.35 +/- 0.05 mm (f = 10...55 Hz) conforming to IEC 61496-1

Offer Sustainability

Sustainable offer status	Green Premium product
RoHS (date code: YYWW)	Compliant - since 1425 - Schneider Electric declaration of conformity
REACh	Reference not containing SVHC above the threshold
Product environmental profile	Available Download Product Environmental
Product end of life instructions	Available Download End Of Life Manual

Contractual warranty

Period	18 months

Dimensions Drawings

Dimensions

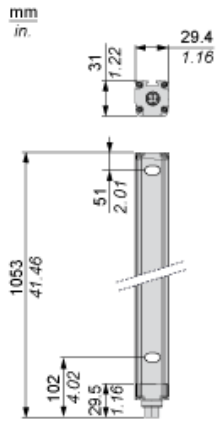

Brackets Dimensions

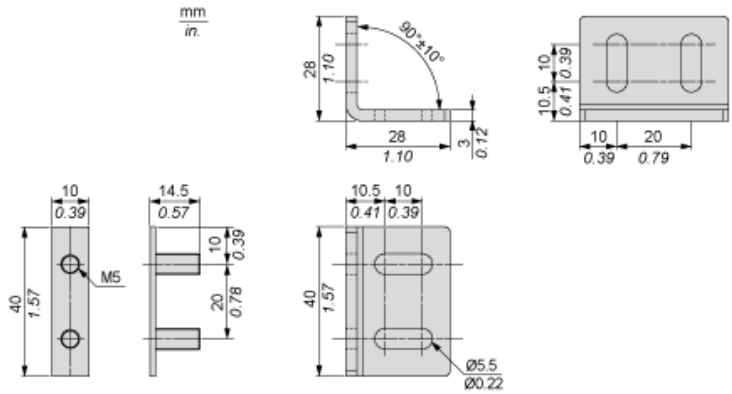

Mounting and Clearance

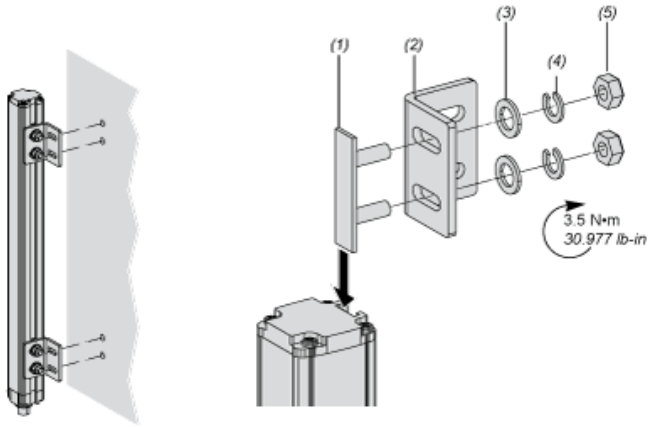

(1) Insert
(2) Bracket
(3) Washer
(4) Spring washer
(5) Nut

Wiring Diagrams

Transmitter Connections

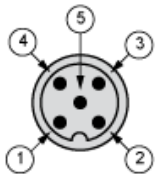

(1) +24 Vdc
(2) Configuration_0
(3) 0 Vdc
(4) Configuration_1
(5) FE

Transmitter configurations and operating modes

	High range option	Low range option	Transmitter in Test state	Forbidden wiring
Pin 4 : Configuration_1	24 V	0 V	0 V	24 V
Pin 2 : Configuration_0	0 V	24 V	0 V	24 V

Receiver Connections

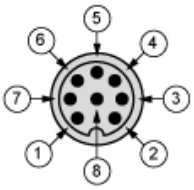

(1) OSSD1
(2) + 24 V
(3) OSSD2
(4) Configuration_A
(5) K1_K2 Feeback/Restart
(6) Configuration_B
(7) 0 Vdc
(8) FE

Receiver Configurations and Operating Modes

Automatic Start/Restart

Without External Device Monitoring (EDM) feedback loop

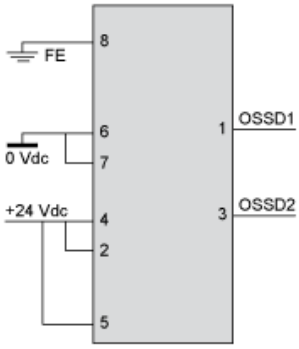

With External Device Monitoring (EDM) feedback loop

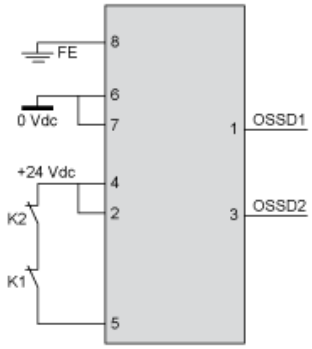

Manual Start/Restart

Without External Device Monitoring (EDM) feedback loop

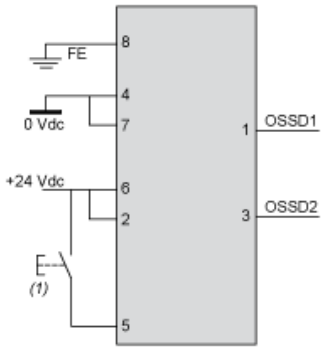

(1) Restart

With External Device Monitoring (EDM) feedback loop

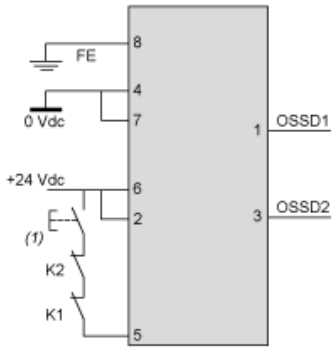

(1) Restart

Connection Schematics

Standalone Application

XUSL4E light curtains are conforming to Type 4 (IEC 61496-1), SIL3 (IEC 61508) - SILCL3 (IEC 62061) and PLd- Cat.4 (EN ISO 13849-1:2008)

Example of wiring diagram with manual start, external device monitoring and low range

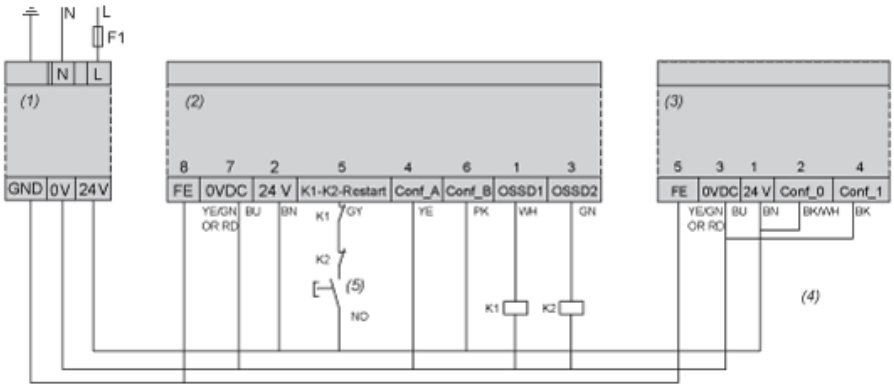

(1) Power supply
(2) XUSL Receiver
(3) XUSL transmitter
(4) Low range
(5) Start

The contactors K1/K2 must have :

* Normally closed mirror contact, according to IEC 60947-4-1 for power contactors
* Linked contacts (or force guided contacts), according to IEC 60947-5-1 or EN 50205 for auxiliary contactors or control relays