PRY BARS

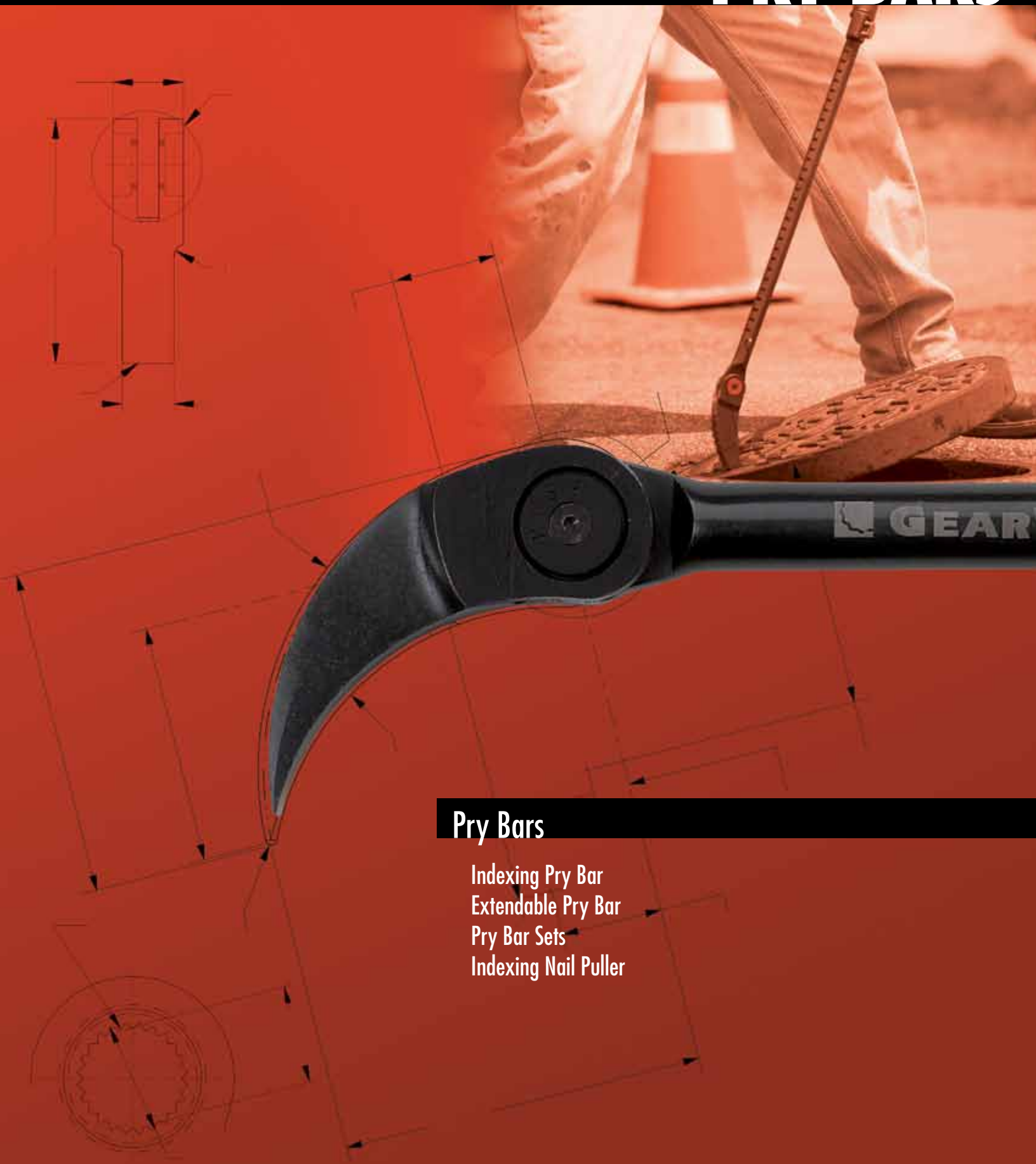

Pry Bars

Indexing Pry Bar
Extendable Pry Bar
Pry Bar Sets
Indexing Nail Puller

INDEXING PRY BARS

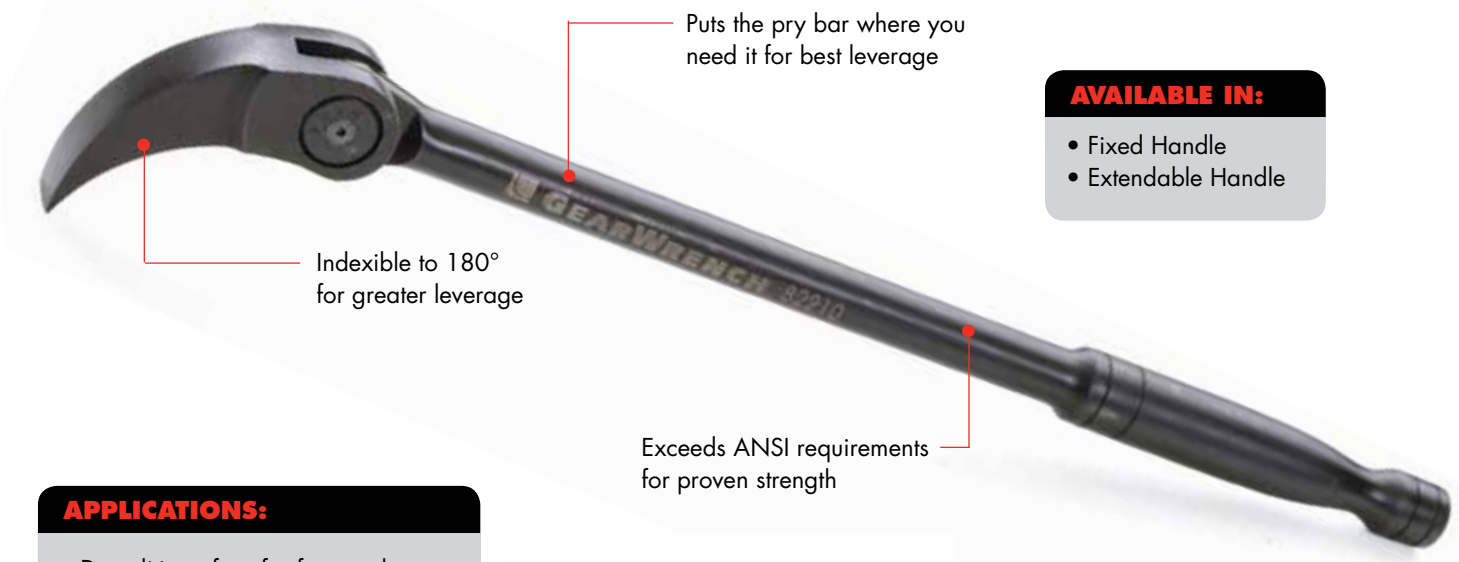

AVAILABLE IN:

- Fixed Handle
- Extendable Handle

APPLICATIONS:

- Demolition of roof rafters and floor joists
- Removing broken concrete
- Repositioning equipment
- Aligning steel components and fabrications
- Engine repositioning and placement



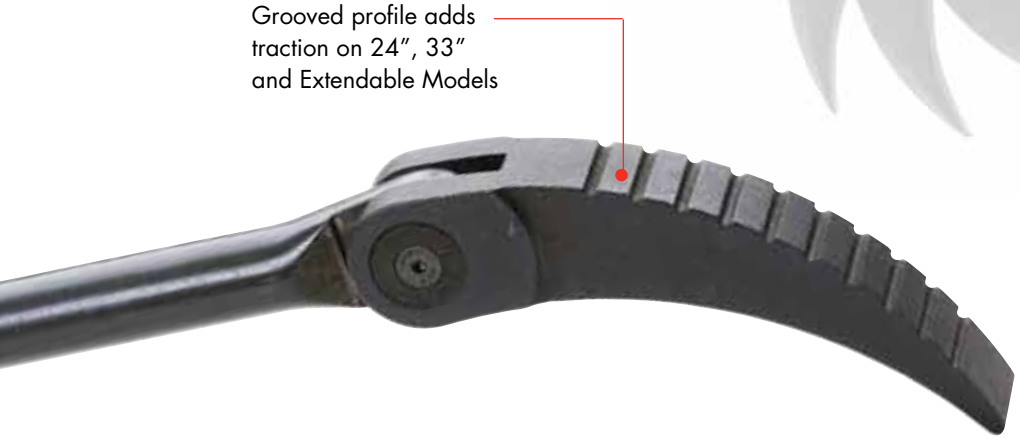





Extendable pry bar extends for greater access and leverage and collapses so you can store it securely in your tool box



Extends from 29″ to 48″



Push button to extend reach

INDEXIBLE NAIL PULLER

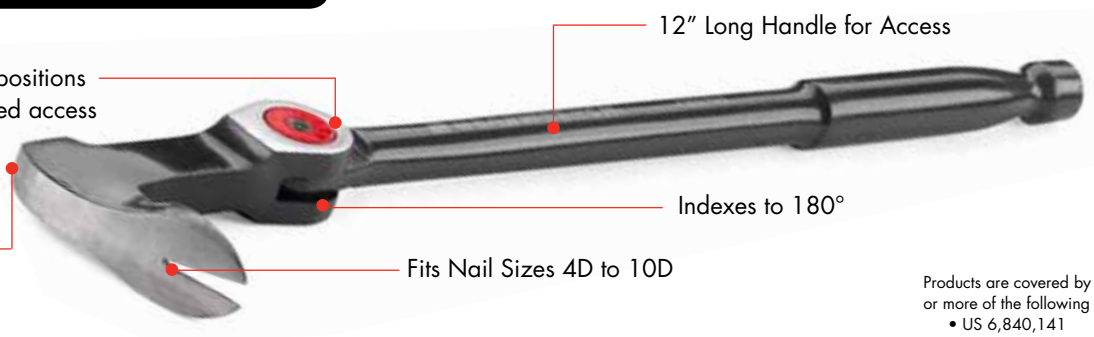

12″ Long Handle for Access

14 Locking positions for unmatched access

Indexes to 180°

Striking Face

Fits Nail Sizes 4D to 10D

Products are covered by one or more of the following patents:
• US 6,840,141



82300 - 2 Pc. Pry Bar Set

Item No.	Description
82216	16″ Indexing Pry Bar
82208	8″ Indexing Pry Bar



82301 - 3 Pc. Pry Bar Set

Item No.	Description
82216	16″ Indexing Pry Bar
82210	10″ Indexing Pry Bar
82208	8″ Indexing Pry Bar



Open Stock - Indexing Pry Bar

Item No.	Description
82208	8″ Indexing Pry Bar
82210	10″ Indexing Pry Bar
82216	16″ Indexing Pry Bar
82224	24″ Indexing Pry Bar
82233	33″ Indexing Pry Bar



PATENT PENDING

Open Stock - Extendable Pry Bar

Item No.	Description
82220	18″ to 29″ Extendable Pry Bar
82248	29″ to 48″ Extendable Pry Bar



82212 - 12″ Index Nail Puller

- **Fits nail sizes 4D to 10D**
- **Indexible to 180°**
- **14 locking positions**