WWW.TENGTOOLS.COM



26" PRO35™ STACK FOAM TOOL KIT 702 PIECES RED

- 702-piece tool kit for automotive and heavy-duty vehicle professionals, housed in stacked tool storage with 12 fully extendable drawers
- Includes mechanic tools organized in high-density EVA foam inserts
- Heavy gauge steel construction treated with a 5-step phosphate-free rust prevention process and a powder coat finish
- Equipped with 5" heavy-duty castors and a comfort grip handle for mobility, plus a 3-digit combination lock for security
- Features TengTools Tool Control System in high-density EVA foam

The TengTools 26" PRO35™ stack tool kit TKS26R702F in matte red caters to professionals in the automotive and heavy-duty vehicle industries. This set, consisting of 702 pieces, is designed to offer a balanced combination of versatility and organized storage. The kit covers a broad spectrum of tools necessary for automotive and heavy-duty vehicle work: 1/4, 3/8, 1/2, and 3/4 drive sockets, bit sockets, ratchets, impact tools, combination spanners, screwdrivers, bits, T-handle hex & tx keys, pliers, power grips, torque wrenches, taps, dies, drills, and general tools. The included sets are precisely organized in three-color precision-cut high-density EVA foam trays that utilize 10 of the available 12 drawers, ensuring every tool has its dedicated place while reserving some space for additional tools. The tool kit is housed in a two-tiered tool stack consisting of a roller cabinet and a tool chest. This configuration offers a storage solution with overall dimensions of 680 mm in width, 460 mm in depth, and 1443 mm in height (including castors). The storage units are made of heavy gauge steel, have undergone a 5-step phosphate-free rust prevention process and are built for durability and long lasting performance in professional settings. The cabinet includes accessory holes on both sides for additional customization and attachment of accessories. Mobility is enhanced by two 5" braked swivel castors and two 5" fixed castors, along with a comfort grip handle on the side of the cabinet for easy maneuvering. The tool chest's distinctive drop front with the TengTools logo not only secures the contents but also adds a unique touch to the overall design. A 3-digit combination lock on each unit makes it harder to access the contents unauthorised. The roller cabinet features seven drawers: five with a height of 75 mm and two taller drawers at 154 mm. The accompanying tool chest has five drawers - two with a height of 50 mm and three with a height of 75 mm. Each drawer is fully extendable and has a load capacity of 30kg and is suitable for various tools and accessories. Each drawer has smooth running ball-bearing slides and is fitted with a noise reducing EVA mat that also protects the tools.

General information

Country of origin: Taiwan
Barcode: 5020385215597
Tarriff code Europe: 8206000000
ECCN US: EAR99
UNSPSC: 27113201

Dimensions

Net weight (g): 166260
Width (mm): 680
Depth (mm): 460
Height (mm): 1430
Height with castors (mm): 1430
Max static load: 530 kg
Max dynamic load: 330 kg
Number of drawer: 12
Drawer capacity: 5 × 30 kg, 7 × 40 kg
Drawer depth: 12 × 380 mm
Drawer height: 2 × 50 mm, 8 × 75 mm, 2 × 154 mm
Drawer width: 12 × 575 mm

Attributes

Product type: Mobile Tool Kits
User segment: Auto, Heavy Duty Vehicle
Number of pieces: 702
Inlay material: FOAM
Colour: Red
Castor size: 5" x 1-1/4"
Braked swivel castors: 2
Fixed castors: 2
Type of work top: 5 mm EVA mat

Features



Technical changes and errors may occur. 01-08-2024 20:00

DESIGNED IN SWEDEN

TengTools is a Swedish company present in more than 30 markets worldwide, and offers hand tools in smart storage solutions for demanding professionals within the automotive, maintenance and engineering sectors, as well as motor sport enthusiasts who aspire to use the same tools as top mechanics across the globe.

Sandbergsvägen 3
441 39 Alingsås, Sweden

SPARE PART LIST

TSW26R7

Version: 4

WWW.TENGTOOLS.COM

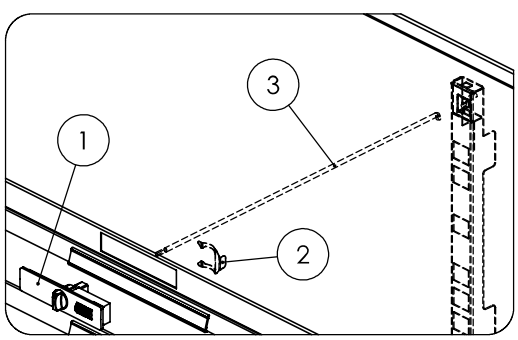

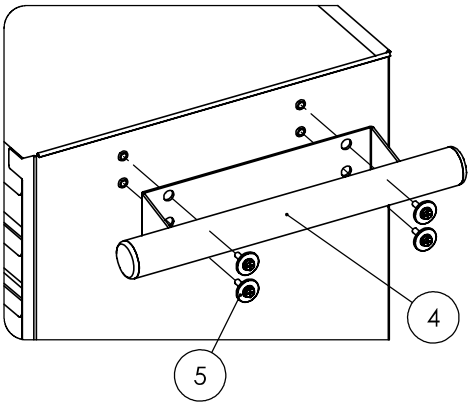

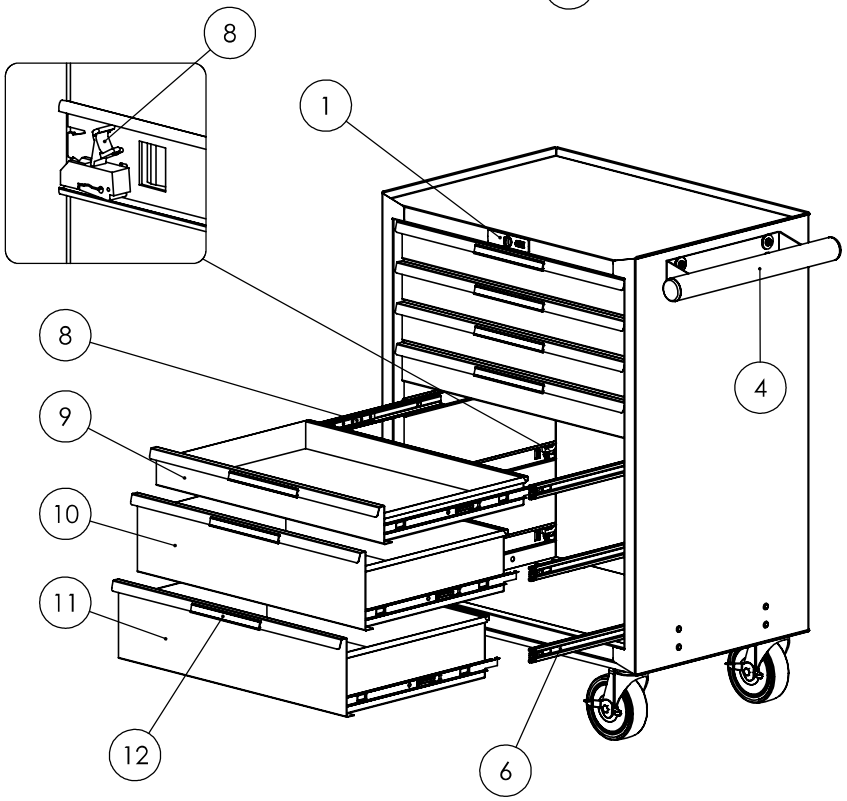

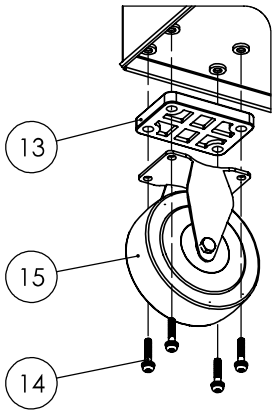

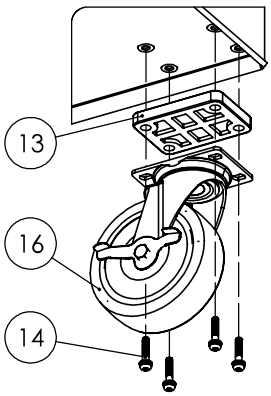

POS	DESCRIPTION	ITEM ID
1A	Combination lock 180°	TC-180CLOCK
1B	Key cylinder lock 180° (optional)	TC-180KEYLOCK
2	Cam for lock (included in Pos 1)	TCW806N-02
3	Locking bar	TCW603-01
4	Side handle	TCW807NBK1-14
5	Screws for side handle (4pcs)	TCW603-08
6	Slider 16" 36 mm Right (1pc)	TCW806N-06
7	Slider 16" 36 mm Left (1pc)	TCW810N-06
8	Clip for sliders (included in Pos 6 & 7)	Wheel back.iam
9	Drawer 575 x 380 x 75 mm Red	TSW26R-75
10	Drawer 575 x 380 x 154 mm Red	TSW26R-150
11	Drawer 575 x 380 x 154 mm Red with Logo	TSW26RF-150
12A	Aluminium drawer handle (3 pcs)	ALUE803
12B	Aluminium drawer handle (4 pcs)	ALUE804
13	Plastic spacer for casters 10 mm (1 pc)	TCW603-03
14	Screws for casters (4 pcs)	TCW603-09
15	Fixed casters 5" x 1-1/4" (1 pc)	TCW807N-13
16	Swivel casters 5" x 1-1/4" (1 pc)	TCW807N-12

SPARE PART LIST

TST26R5F
Version: 3

WWW.TENGTOOLS.COM

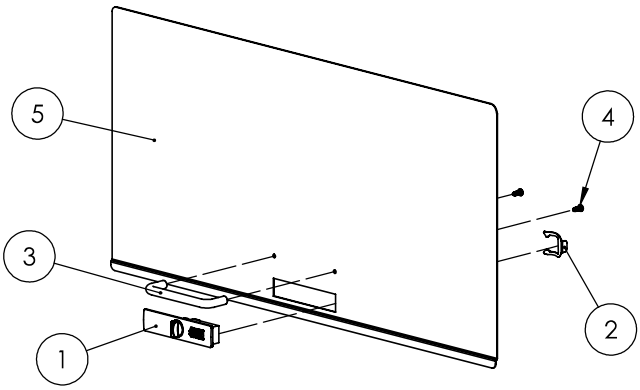

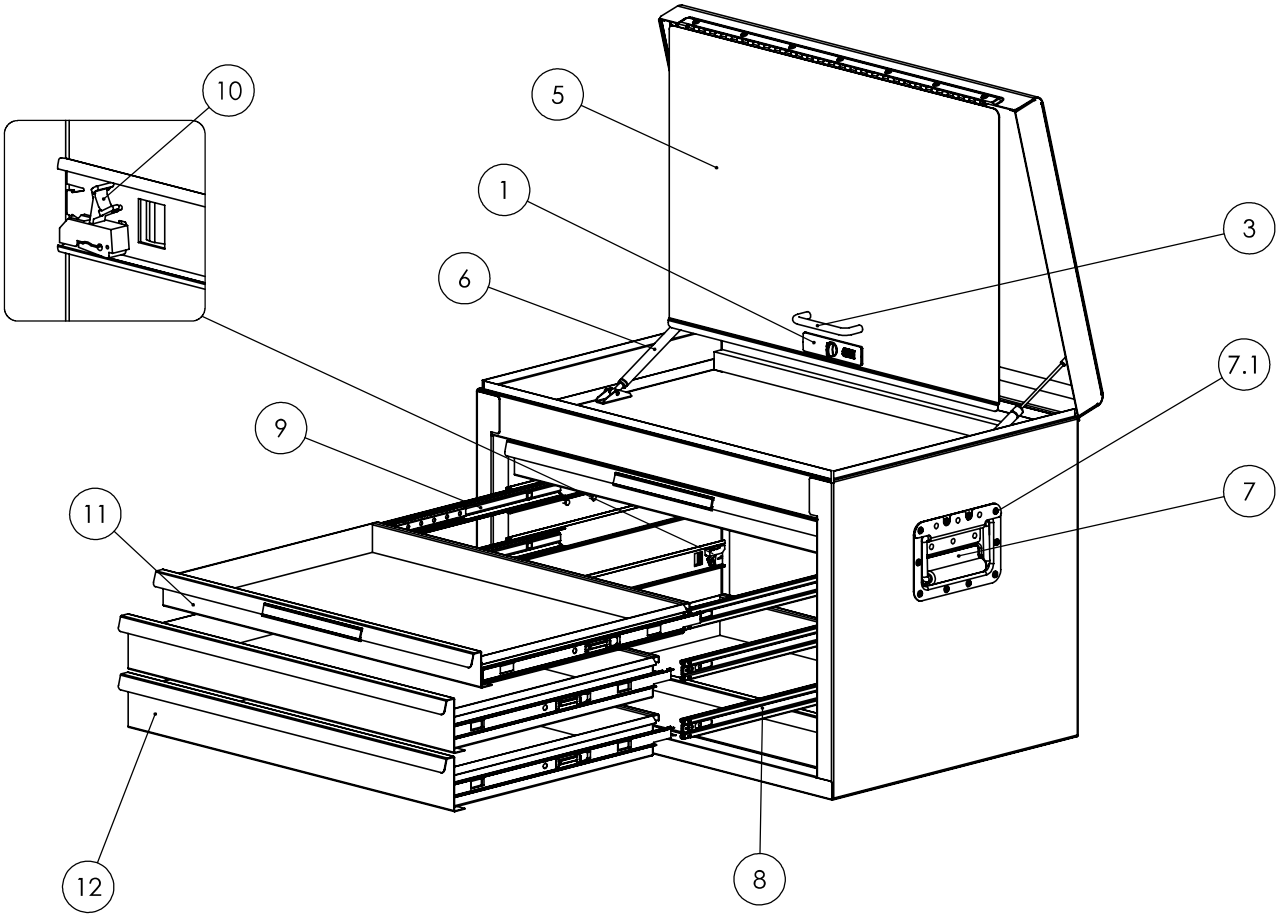

POS	DESCRIPTION	ITEM ID
1A	Combination lock 90°	TC-90CLOCK
1B	Key cylinder lock 90° (optional)	TC-90KEYLOCK
2	Cam for lock (inluded in Pos 1)	TC803-05
3	Drop front handle Black	TC805NFXBK1-10
4	Screws for drop fron handle (2 pcs)	TC606-10
5	Drop front 26" with Logo Red	TC805NFX-11
6	Hydraulic Lid Stay (2 pcs)	TC805NFX-12
7	Retractable side handle	TCDSHA
7.1	Rivets: 4,8mm x 7,4mm Black (10 pcs)	-
8	Slider 16" 36 mm Right (1pc)	TCW806N-06
9	Slider 16" 36 mm Left (1pc)	TCW810N-06
10	Clip for slider (included in Pos 9)	TC803N-13
11	Drawer 575 x 380 x 50 mm Red	TST26R-50
12	Drawer 575 x 380 x 75 mm Red	TSW26R-75
13A	Aluminium drawer handle (3 pcs)	ALUE803
13B	Aluminium drawer handle (4 pcs)	ALUE804

ADDITIONAL IMAGES

















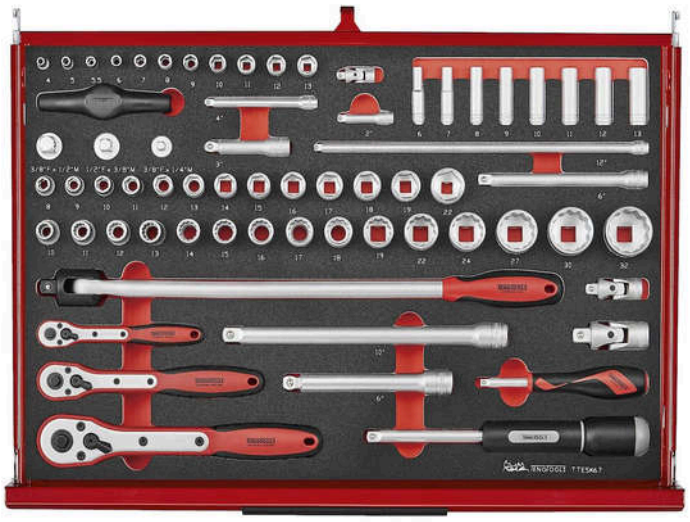







LIST OF CONTENTS

TKS26R702F 26" PRO35™ stack FOAM tool kit 702 pieces red

TCA08 Paper roll holder for side handle

TST26R5F 26" PRO35™ deep tool chest 5 drawers red

TSW26R7 26" PRO35™ roller cabinet 7 drawers red

TTEISK103 1/2" square drive impact socket set 103 pieces

920020N 1/2" Impact Extension Bar DIN 75 mm

920021N 1/2" Impact Extension Bar DIN 125 mm

920023N 1/2" Impact Extension Bar DIN 250 mm

920030N 1/2" Impact Universal Joint DIN

920036N Impact Reducing Adaptor 1/2"F - 3/8"M DIN

920037N Impact Step Up Adaptor 1/2"F - 3/4"M DIN

920060-C 1/2" Impact Coupler Adaptor 5/16" Hex

920508N 1/2" Impact Socket DIN Metric 8 mm

920510N 1/2" Impact Socket DIN Metric 10 mm

920511N 1/2" Impact Socket DIN Metric 11 mm

920512N 1/2" Impact Socket DIN Metric 12 mm

920513N 1/2" Impact Socket DIN Metric 13 mm

920514N 1/2" Impact Socket DIN Metric 14 mm

920515N 1/2" Impact Socket DIN Metric 15 mm

920516N 1/2" Impact Socket DIN Metric 16 mm

920517N1 1/2" Impact Socket DIN Metric 17 mm

920518N 1/2" Impact Socket DIN Metric 18 mm

920519N1 1/2" Impact Socket DIN Metric 19 mm

920521N1 1/2" Impact Socket DIN Metric 21 mm

920522N 1/2" Impact Socket DIN Metric 22 mm

920524N 1/2" Impact Socket DIN Metric 24 mm

920527N 1/2" Impact Socket DIN Metric 27 mm

920528N 1/2" Impact Socket DIN Metric 28 mm

920529N 1/2" Impact Socket DIN Metric 29 mm

920530N 1/2" Impact Socket DIN Metric 30 mm

920532N 1/2" Impact Socket DIN Metric 32 mm

920610N 1/2" Deep Impact Socket DIN Metric 10 mm

920611N 1/2" Deep Impact Socket DIN Metric 11 mm

920612N 1/2" Deep Impact Socket DIN Metric 12 mm

920613N 1/2" Deep Impact Socket DIN Metric 13 mm

920614N 1/2" Deep Impact Socket DIN Metric 14 mm

920615N 1/2" Deep Impact Socket DIN Metric 15 mm

920616N 1/2" Deep Impact Socket DIN Metric 16 mm

920617N 1/2" Deep Impact Socket DIN Metric 17 mm

920618N 1/2" Deep Impact Socket DIN Metric 18 mm

920619N 1/2" Deep Impact Socket DIN Metric 19 mm

920621N 1/2" Deep Impact Socket DIN Metric 21 mm

WWW.TENGTOOLS.COM

920622N	1/2" Deep Impact Socket DIN Metric 22 mm
920624N	1/2" Deep Impact Socket DIN Metric 24 mm
920627N	1/2" Deep Impact Socket DIN Metric 27 mm
920628N	1/2" Deep Impact Socket DIN Metric 28 mm
920629N	1/2" Deep Impact Socket DIN Metric 29 mm
920630N	1/2" Deep Impact Socket DIN Metric 30 mm
920632N	1/2" Deep Impact Socket DIN Metric 32 mm
920635N	1/2" Deep Impact Socket DIN Metric 35 mm
920636N	1/2" Deep Impact Socket DIN Metric 36 mm
GRP3000201	1/4" PH G Impact Bits 30 mm PH2G
HEXP3000301	1/4" Hex Impact Bits 30 mm Hex 3 mm
HEXP3000401	1/4" Hex Impact Bits 30 mm Hex 4 mm
HEXP3000501	1/4" Hex Impact Bits 30 mm Hex 5 mm
HEXP3000601	1/4" Hex Impact Bits 30 mm Hex 6 mm
ID14B	1/4" Impact Driver
MBHI14	1/4" Magnetic Impact Bit Holder 60 mm
NSP65108	1/4" Impact Nut Setter 1/4"
NSP65507	1/4" Impact Nut Setter 7 mm
NSP65508	1/4" Impact Nut Setter 8 mm
NSP65510	1/4" Impact Nut Setter 10 mm
NSP65513	1/4" Impact Nut Setter 13 mm
O92194	Retaining Ring 19 × 4.0 mm
O92244	Retaining Ring 24 × 4.0 mm
P92320	Retaining Pin 3 × 20 mm
P92325	Retaining Pin 3 × 25 mm
PHP3000101	1/4" PH Impact Bits 30 mm PH1
PHP3000201	1/4" PH Impact Bits 30 mm PH2
PHP3000301	1/4" PH Impact Bits 30 mm PH3
PZP3000101	1/4" PZ Impact Bits 30 mm PZ1
PZP3000201	1/4" PZ Impact Bits 30 mm PZ2
PZP3000301	1/4" PZ Impact Bits 30 mm PZ3
QCI14	1/4" Quick Chuck Impact Bit Holder 60 mm
ROBP3000101	1/4" ROB Impact Bits 30 mm ROB1
ROBP3000201	1/4" ROB Impact Bits 30 mm ROB2
TXP3001001	1/4" TX Impact Bits 30 mm TX10
TXP3001501	1/4" TX Impact Bits 30 mm TX15
TXP3002001	1/4" TX Impact Bits 30 mm TX20
TXP3002501	1/4" TX Impact Bits 30 mm TX25
TXP3002701	1/4" TX Impact Bits 30 mm TX27
TXP3003001	1/4" TX Impact Bits 30 mm TX30
TXP3004001	1/4" TX Impact Bits 30 mm TX40

TTEMB13Q Plier Set Q FOAM4X4 13 Pieces

401-10	Curved Jaw Power Grip Plier 235 mm
401-4	Curved Jaw Power Grip Plier 105 mm

404-6	Long Nose Power Grip Plier 170 mm
BC408	Mini Bolt Cutter 200 mm
MB441-6	Side Cutting Plier 160 mm
MB444-6	Cable Cutter 160 mm
MB452-7	Heavy Duty Combination Plier 185 mm
MB461-8	Long Nose Plier 200 mm
MB482-10Q	Quick Set Water Pump Plier HRC60 250 mm
MBE470-7	Circlip Plier Inner Straight PRO 175 mm
MBE471-7	Circlip Plier Inner Bent PRO 175 mm
MBE472-7	Circlip Plier Outer Straight PRO 175 mm
MBE473-7	Circlip Plier Outer Bent PRO 165 mm

TTEMD115N Mixed driver and bits set FOAM4X4 115 pieces

1400B	1/4" Mini Bits Ratchet
FL2506A03	1/4" Flat Bits 25 mm 0.6 × 3.5 mm
FL2506B03	1/4" Flat Bits 25 mm 0.6 × 4.5 mm
FL2508A03	1/4" Flat Bits 25 mm 0.8 × 4.0 mm
FL2508B03	1/4" Flat Bits 25 mm 0.8 × 5.5 mm
FL2510A03	1/4" Flat Bits 25 mm 1.0 × 5.5 mm
FL2512A03	1/4" Flat Bits 25 mm 1.2 × 6.5 mm
FL2516A03	1/4" Flat Bits 25 mm 1.6 × 8.0 mm
FL5006A03	1/4" Flat Bits 50 mm 0.6 × 3.5 mm
FL5008A03	1/4" Flat Bits 50 mm 0.8 × 4.0 mm
FL5008B03	1/4" Flat Bits 50 mm 0.8 × 5.5 mm
FL5010A03	1/4" Flat Bits 50 mm 1.0 × 5.5 mm
FL5012A03	1/4" Flat Bits 50 mm 1.2 × 6.5 mm
GR25002010	1/4" PH G Bits 25 mm PH2G
HEX2500203	1/4" Hex Bits 25 mm 2 mm
HEX2500303	1/4" Hex Bits 25 mm 3 mm
HEX2500403	1/4" Hex Bits 25 mm 4 mm
HEX2500503	1/4" Hex Bits 25 mm 5 mm
HEX2500603	1/4" Hex Bits 25 mm 6 mm
HEX2500803	1/4" Hex Bits 25 mm 8 mm
HEX5000403	1/4" Hex Bits 50 mm 4 mm
HEX5000503	1/4" Hex Bits 50 mm 5 mm
HEX5000603	1/4" Hex Bits 50 mm 6 mm
HEX5000803	1/4" Hex Bits 50 mm 8 mm
MD915N	Flat Screwdriver 0.5 × 2.5 × 75 mm S
MD916N	Flat Screwdriver 0.6 × 3.5 × 75 mm S
MD917N	Flat Screwdriver 0.8 × 4.0 × 100 mm S
MD920N1	Flat Screwdriver 0.5 × 3.0 × 100 mm S
MD922N	Flat Screwdriver 1.0 × 5.5 × 75 mm S
MD923N	Flat Screwdriver 1.0 × 5.5 × 150 mm M
MD932N	Flat Screwdriver 1.2 × 6.5 × 100 mm L Hex Shaft
MD932N1	Flat Screwdriver 1.2 × 6.5 × 150 mm L Hex Shaft

MD934N	Flat Screwdriver 1.2 × 8.0 × 150 mm XL Hex Shaft
MD935N	Flat Screwdriver 1.6 × 10.0 × 200 mm XL Hex Shaft
MD940N	PH Screwdriver PH0 × 75 mm S
MD947N1	PH Screwdriver PH1 × 75 mm M
MD952N	PH Screwdriver PH2 × 100 mm L Hex Shaft
MD953N	PH Screwdriver PH3 × 150 mm XL Hex Shaft
MD954N	PH Screwdriver PH4 × 200 mm XL Hex Shaft
MD960N	PZ Screwdriver PZ0 × 75 mm S
MD961N	PZ Screwdriver PZ1 × 75 mm M
MD961N2	PZ Screwdriver PZ1 × 38 mm XS
MD962N1	PZ Screwdriver PZ2 × 150 mm L
MD963N	PZ Screwdriver PZ3 × 150 mm XL Hex Shaft
MDBH	1/4" Stubby Bits Driver
MDQ217	1/4" Quick Chuck Bits Driver 217 mm
MDTHQ	1/4" T Handle Quick Chuck Bits Driver
PH2500103	1/4" PH Bits 25 mm PH1
PH2500203	1/4" PH Bits 25 mm PH2
PH2500303	1/4" PH Bits 25 mm PH3
PH5000103	1/4" PH Bits 50 mm PH1
PH5000203	1/4" PH Bits 50 mm PH2
PH5000303	1/4" PH Bits 50 mm PH3
PZ2500103	1/4" PZ Bits 25 mm PZ1
PZ2500203	1/4" PZ Bits 25 mm PZ2
PZ2500303	1/4" PZ Bits 25 mm PZ3
PZ5000103	1/4" PZ Bits 50 mm PZ1
PZ5000203	1/4" PZ Bits 50 mm PZ2
PZ5000303	1/4" PZ Bits 50 mm PZ3
RHA14	1/4" Ratchet Head Hex/Square Drive
ROB2500103	1/4" ROB Bits 25 mm ROB1
ROB2500203	1/4" ROB Bits 25 mm ROB2
ROB2500303	1/4" ROB Bits 25 mm ROB3
TPX2501003	1/4" TPX Bits 25 mm TPX10
TPX2501503	1/4" TPX Bits 25 mm TPX15
TPX2502003	1/4" TPX Bits 25 mm TPX20
TPX2502503	1/4" TPX Bits 25 mm TPX25
TPX2502703	1/4" TPX Bits 25 mm TPX27
TPX2503003	1/4" TPX Bits 25 mm TPX30
TPX2504003	1/4" TPX Bits 25 mm TPX40
TX2500603	1/4" TX Bits 25 mm TX6
TX2500703	1/4" TX Bits 25 mm TX7
TX2500803	1/4" TX Bits 25 mm TX8
TX2500903	1/4" TX Bits 25 mm TX9
TX2501003	1/4" TX Bits 25 mm TX10
TX2501503	1/4" TX Bits 25 mm TX15

TX2502003 1/4" TX Bits 25 mm TX20

TX2502503 1/4" TX Bits 25 mm TX25

TX2502703 1/4" TX Bits 25 mm TX27

TX2503003 1/4" TX Bits 25 mm TX30

TX2504003 1/4" TX Bits 25 mm TX40

TX5000803 1/4" TX Bits 50 mm TX8

TX5001003 1/4" TX Bits 50 mm TX10

TX5001503 1/4" TX Bits 50 mm TX15

TX5002003 1/4" TX Bits 50 mm TX20

TX5002503 1/4" TX Bits 50 mm TX25

TX5002703 1/4" TX Bits 50 mm TX27

TX5003003 1/4" TX Bits 50 mm TX30

TTESK25 Metric 6-point socket & spanner set 25 pieces

600534 Combination Spanner Metric 34 mm

600536 Combination Spanner Metric 36 mm

600538 Combination Spanner Metric 38 mm

M3400-72 3/4" Ratchet Heavy Duty 72 Teeth

M340021-C 3/4" Extension Bar 200 mm

M340070-C 3/4" Flex Handle 480 mm

M3405196-C 3/4" Socket 6 pt Metric 19 mm

M3405216-C 3/4" Socket 6 pt Metric 21 mm

M3405226-C 3/4" Socket 6 pt Metric 22 mm

M3405246-C 3/4" Socket 6 pt Metric 24 mm

M3405266-C 3/4" Socket 6 pt Metric 26 mm

M3405276-C 3/4" Socket 6 pt Metric 27 mm

M3405306-C 3/4" Socket 6 pt Metric 30 mm

M3405326-C 3/4" Socket 6 pt Metric 32 mm

M3405336-C 3/4" Socket 6 pt Metric 33 mm

M3405346-C 3/4" Socket 6 pt Metric 34 mm

M3405366-C 3/4" Socket 6 pt Metric 36 mm

M3405386-C 3/4" Socket 6 pt Metric 38 mm

M3405416-C 3/4" Socket 6 pt Metric 41 mm

M3405466-C 3/4" Socket 6 pt Metric 46 mm

M3405506-C 3/4" Socket 6 pt Metric 50 mm

M341514-C 3/4" Hex Bit Socket Metric 14 mm

M341517-C 3/4" Hex Bit Socket Metric 17 mm

M341519-C 3/4" Hex Bit Socket Metric 19 mm

M341522-C 3/4" Hex Bit Socket Metric 22 mm

TTESK67 1/4", 3/8" & 1/2" drive metric socket set 67 pcs

1200FRP 1/2" Ratchet FRP 45 Teeth

1201 1/2" Breaker Bar 450 mm DIN3122

1400FRP 1/4" Ratchet FRP 45 Teeth

3800FRP 3/8" Ratchet FRP 45 Teeth

M120021W-C	1/2" Wobble Extension Bar 150 mm
M120022-C	1/2" Extension Bar 255 mm
M120030-C	1/2" Universal Joint
M120036-C	Reducing Adaptor 1/2"F - 3/8"M
M120510-C	1/2" Socket 12 pt Metric 10 mm
M120511-C	1/2" Socket 12 pt Metric 11 mm
M120512-C	1/2" Socket 12 pt Metric 12 mm
M120513-C	1/2" Socket 12 pt Metric 13 mm
M120514-C	1/2" Socket 12 pt Metric 14 mm
M120515-C	1/2" Socket 12 pt Metric 15 mm
M120516-C	1/2" Socket 12 pt Metric 16 mm
M120517-C	1/2" Socket 12 pt Metric 17 mm
M120518-C	1/2" Socket 12 pt Metric 18 mm
M120519-C	1/2" Socket 12 pt Metric 19 mm
M120522-C	1/2" Socket 12 pt Metric 22 mm
M120524-C	1/2" Socket 12 pt Metric 24 mm
M120527-C	1/2" Socket 12 pt Metric 27 mm
M120530-C	1/2" Socket 12 pt Metric 30 mm
M120532-C	1/2" Socket 12 pt Metric 32 mm
M140015-C	1/4" Spinner Handle
M140020-C	1/4" Extension Bar 50 mm
M140021-C	1/4" Extension Bar 100 mm
M140024-C	1/4" Extension Bar 305 mm
M140030-C	1/4" Universal Joint
M140504-C	1/4" Socket 6 pt Metric 4 mm
M140505-C	1/4" Socket 6 pt Metric 5 mm
M1405055-C	1/4" Socket 6 pt Metric 5.5 mm
M140506-C	1/4" Socket 6 pt Metric 6 mm
M140507-C	1/4" Socket 6 pt Metric 7 mm
M140508-C	1/4" Socket 6 pt Metric 8 mm
M140509-C	1/4" Socket 6 pt Metric 9 mm
M140510-C	1/4" Socket 6 pt Metric 10 mm
M140511-C	1/4" Socket 6 pt Metric 11 mm
M140512-C	1/4" Socket 6 pt Metric 12 mm
M140513-C	1/4" Socket 6 pt Metric 13 mm
M140606-C	1/4" Deep Socket 6 pt Metric 6 mm
M140607-C	1/4" Deep Socket 6 pt Metric 7 mm
M140608-C	1/4" Deep Socket 6 pt Metric 8 mm
M140609-C	1/4" Deep Socket 6 pt Metric 9 mm
M140610-C	1/4" Deep Socket 6 pt Metric 10 mm
M140611-C	1/4" Deep Socket 6 pt Metric 11 mm
M140612-C	1/4" Deep Socket 6 pt Metric 12 mm
M140613-C	1/4" Deep Socket 6 pt Metric 13 mm
M380020W-C	3/8" Wobble Extension Bar 75 mm

M380021-C	3/8" Extension Bar 150 mm
M380030-C	3/8" Universal Joint
M380035-C	Reducing Adaptor 3/8"F - 1/4"M
M380036-C	Step Up Adaptor 3/8"F - 1/2"M
M380508-C	3/8" Socket 6 pt Metric 8 mm
M380509-C	3/8" Socket 6 pt Metric 9 mm
M380510-C	3/8" Socket 6 pt Metric 10 mm
M380511-C	3/8" Socket 6 pt Metric 11 mm
M380512-C	3/8" Socket 6 pt Metric 12 mm
M380513-C	3/8" Socket 6 pt Metric 13 mm
M380514-C	3/8" Socket 6 pt Metric 14 mm
M380515-C	3/8" Socket 6 pt Metric 15 mm
M380516-C	3/8" Socket 6 pt Metric 16 mm
M380517-C	3/8" Socket 6 pt Metric 17 mm
M380518-C	3/8" Socket 6 pt Metric 18 mm
M380519-C	3/8" Socket 6 pt Metric 19 mm
M380522-C	3/8" Socket 6 pt Metric 22 mm
PT3810R	3/8" Rotating Spinner Handle
T-HD	T Bar Handle Grip

TTESK85 1/4", 3/8" & 1/2" Socket Set FOAM4X4 85 Pieces

M122220T-C	1/2" Long TX Bit Socket TX20
M122225T-C	1/2" Long TX Bit Socket TX25
M122227T-C	1/2" Long TX Bit Socket TX27
M122230T-C	1/2" Long TX Bit Socket TX30
M122240T-C	1/2" Long TX Bit Socket TX40
M122245T-C	1/2" Long TX Bit Socket TX45
M122250T-C	1/2" Long TX Bit Socket TX50
M122255T-C	1/2" Long TX Bit Socket TX55
M122260T-C	1/2" Long TX Bit Socket TX60
M122505-C	1/2" Long Hex Bit Socket Metric 5 mm
M122506-C	1/2" Long Hex Bit Socket Metric 6 mm
M122507-C	1/2" Long Hex Bit Socket Metric 7 mm
M122508-C	1/2" Long Hex Bit Socket Metric 8 mm
M122510-C	1/2" Long Hex Bit Socket Metric 10 mm
M122512-C	1/2" Long Hex Bit Socket Metric 12 mm
M122704-C	1/2" Long Ribe® Bit Socket 04
M122705-C	1/2" Long Ribe® Bit Socket 05
M122706-C	1/2" Long Ribe® Bit Socket 06
M122708-C	1/2" Long Ribe® Bit Socket 08
M122710-C	1/2" Long Ribe® Bit Socket 10
M122711-C	1/2" Long Ribe® Bit Socket 11
M122712-C	1/2" Long Ribe® Bit Socket 12
M122713-C	1/2" Long Ribe® Bit Socket 13
M122805-C	1/2" Long XZN/Triple Square Bit Socket 05

M122806-C	1/2" Long XZN/Triple Square Bit Socket 06
M122808-C	1/2" Long XZN/Triple Square Bit Socket 08
M122810-C	1/2" Long XZN/Triple Square Bit Socket 10
M122812-C	1/2" Long XZN/Triple Square Bit Socket 12
M122814-C	1/2" Long XZN/Triple Square Bit Socket 14
M122816-C	1/2" Long XZN/Triple Square Bit Socket 16
M140704-C	1/4" TX-E Socket E4
M140705-C	1/4" TX-E Socket E5
M140706-C	1/4" TX-E Socket E6
M140707-C	1/4" TX-E Socket E7
M140708-C	1/4" TX-E Socket E8
M141210T-C	1/4" TX Bit Socket TX10
M141215T-C	1/4" TX Bit Socket TX15
M141220T-C	1/4" TX Bit Socket TX20
M141225T-C	1/4" TX Bit Socket TX25
M141227T-C	1/4" TX Bit Socket TX27
M141230T-C	1/4" TX Bit Socket TX30
M141240T-C	1/4" TX Bit Socket TX40
M141300-C	1/4" PH Bit Socket PH0
M141301-C	1/4" PH Bit Socket PH1
M141302-C	1/4" PH Bit Socket PH2
M141303-C	1/4" PH Bit Socket PH3
M141404-C	1/4" Flat Bit Socket 4 mm
M1414055-C	1/4" Flat Bit Socket 5.5 mm
M141407-C	1/4" Flat Bit Socket 7 mm
M141601-C	1/4" PZ Bit Socket PZ1
M141602-C	1/4" PZ Bit Socket PZ2
M141603-C	1/4" PZ Bit Socket PZ3
M380020-C	3/8" Extension Bar 75 mm
M380710-C	3/8" TX-E Socket E10
M380712-C	3/8" TX-E Socket E12
M380714-C	3/8" TX-E Socket E14
M380716-C	3/8" TX-E Socket E16
M380718-C	3/8" TX-E Socket E18
M381210-C	3/8" TPX Bit Socket TPX10
M381210T-C	3/8" TX Bit Socket TX10
M381215-C	3/8" TPX Bit Socket TPX15
M381215T-C	3/8" TX Bit Socket TX15
M381220-C	3/8" TPX Bit Socket TPX20
M381220T-C	3/8" TX Bit Socket TX20
M381225-C	3/8" TPX Bit Socket TPX25
M381225T-C	3/8" TX Bit Socket TX25
M381227-C	3/8" TPX Bit Socket TPX27
M381227T-C	3/8" TX Bit Socket TX27

M381230-C 3/8" TPX Bit Socket TPX30

M381230T-C 3/8" TX Bit Socket TX30

M381240-C 3/8" TPX Bit Socket TPX40

M381240T-C 3/8" TX Bit Socket TX40

M381245-C 3/8" TPX Bit Socket TPX45

M381245T-C 3/8" TX Bit Socket TX45

M381250-C 3/8" TPX Bit Socket TPX50

M381250T-C 3/8" TX Bit Socket TX50

M381503-C 3/8" Hex Bit Socket Metric 3 mm

M381504-C 3/8" Hex Bit Socket Metric 4 mm

M381505-C 3/8" Hex Bit Socket Metric 5 mm

M3815055-C 3/8" Hex Bit Socket Metric 5.5 mm

M381506-C 3/8" Hex Bit Socket Metric 6 mm

M381507-C 3/8" Hex Bit Socket Metric 7 mm

M381508-C 3/8" Hex Bit Socket Metric 8 mm

M381510-C 3/8" Hex Bit Socket Metric 10 mm

M381512-C 3/8" Hex Bit Socket Metric 12 mm

TTESP31A Metric combination & ratcheting spanner set 31 pcs

600508 Combination Spanner Metric 8 mm

600508R Ratcheting Combination Spanner Metric R 8 mm

600509 Combination Spanner Metric 9 mm

600509R Ratcheting Combination Spanner Metric R 9 mm

600510 Combination Spanner Metric 10 mm

600510R Ratcheting Combination Spanner Metric R 10 mm

600511 Combination Spanner Metric 11 mm

600511R Ratcheting Combination Spanner Metric R 11 mm

600512 Combination Spanner Metric 12 mm

600512R Ratcheting Combination Spanner Metric R 12 mm

600513 Combination Spanner Metric 13 mm

600513R Ratcheting Combination Spanner Metric R 13 mm

600514 Combination Spanner Metric 14 mm

600514R Ratcheting Combination Spanner Metric R 14 mm

600515 Combination Spanner Metric 15 mm

600515R Ratcheting Combination Spanner Metric R 15 mm

600516 Combination Spanner Metric 16 mm

600516R Ratcheting Combination Spanner Metric R 16 mm

600517 Combination Spanner Metric 17 mm

600517R Ratcheting Combination Spanner Metric R 17 mm

600518 Combination Spanner Metric 18 mm

600518R Ratcheting Combination Spanner Metric R 18 mm

600519 Combination Spanner Metric 19 mm

600519R Ratcheting Combination Spanner Metric R 19 mm

600520 Combination Spanner Metric 20 mm

600521 Combination Spanner Metric 21 mm

- **600522** Combination Spanner Metric 22 mm
- **600524** Combination Spanner Metric 24 mm
- **600527** Combination Spanner Metric 27 mm
- **600530** Combination Spanner Metric 30 mm
- **600532** Combination Spanner Metric 32 mm

TTEX18 General tool set 18 pieces

- **4002WT** Adjustable Wrench Wide Jaw 150 mm
- **4004WT** Adjustable Wrench Wide Jaw 250 mm
- **701N1** Hacksaw Ergonomic Handle 24TPI Metal
- **710** Utility Knife
- **CC150F** Flat Cold Chisel 150 × 18 mm
- **CC200F** Flat Cold Chisel 200 × 25 mm
- **CP05** Centre Punch 5 mm
- **HMBP24** Ball Pein Hammer 24oz
- **HMSF** Soft Face Hammer
- **MT03** Measuring Tape Metric/Inch 3m
- **PPS06** Parallel Pin Punch Set 6 Pieces
  - **PP03** Parallel Pin Punch 3 mm
  - **PP04** Parallel Pin Punch 4 mm
  - **PP05** Parallel Pin Punch 5 mm
  - **PP06** Parallel Pin Punch 6 mm
  - **PP07** Parallel Pin Punch 7 mm
  - **PP08** Parallel Pin Punch 8 mm
- **SCR01** Scriber
- **ST200** Steel Rule mm/AF 200 mm

TTEX219 General service tool set 219 pieces

- **1292AG-EP** 1/2" Torque Wrench 40 - 210Nm
- **1400M** 1/4" Mini Palm Ratchet 45 Teeth
- **3892AG-E3** 3/8" Torque Wrench 20 - 110Nm
- **DBX010** Drill Bits Fully Ground 1.0 mm
- **DBX015** Drill Bits Fully Ground 1.5 mm
- **DBX020** Drill Bits Fully Ground 2.0 mm
- **DBX025** Drill Bits Fully Ground 2.5 mm
- **DBX030** Drill Bits Fully Ground 3.0 mm
- **DBX033** Drill Bits Fully Ground 3.3 mm
- **DBX035** Drill Bits Fully Ground 3.5 mm
- **DBX040** Drill Bits Fully Ground 4.0 mm
- **DBX042** Drill Bits Fully Ground 4.2 mm
- **DBX045** Drill Bits Fully Ground 4.5 mm
- **DBX050** Drill Bits Fully Ground 5.0 mm
- **DBX055** Drill Bits Fully Ground 5.5 mm
- **DBX060** Drill Bits Fully Ground 6.0 mm
- **DBX065** Drill Bits Fully Ground 6.5 mm

DBX068 Drill Bits Fully Ground 6.8 mm

DBX070 Drill Bits Fully Ground 7.0 mm

DBX075 Drill Bits Fully Ground 7.5 mm

DBX080 Drill Bits Fully Ground 8.0 mm

DBX085 Drill Bits Fully Ground 8.5 mm

DBX090 Drill Bits Fully Ground 9.0 mm

DBX095 Drill Bits Fully Ground 9.5 mm

DBX100 Drill Bits Fully Ground 10.0 mm

DBX105 Drill Bits Fully Ground 10.5 mm

HN02 Nutsert Gun M3/M4/M5/M6

HR01 Hand Rivet Gun Aluminium Alloy 2.4/3.2/4.0/4.8 mm

M140021-C 1/4" Extension Bar 100 mm

M140070 1/4" Die Chuck M3 - M12

M140071 1/4" Tap Chuck M3 - M8

M140072 1/4" Tap Chuck M5 - M12

M380035-C Reducing Adaptor 3/8"F - 1/4"M

MDM712 Hex Mini Screwdriver 2.5

SCPG Pitch Gauge

SEL01S Screw Extractor No. 1

SEL02S Screw Extractor No. 2

SEL03S Screw Extractor No. 3

SEL04S Screw Extractor No. 4

SEL05S Screw Extractor No. 5

TDD03050 Die M3 × 0,5

TDD04070 Die M4 × 0,7

TDD05080 Die M5 × 0,8

TDD06100 Die M6 × 1,0

TDD08125 Die M8 × 1,25

TDT03050 Tap M3 × 0,5

TDT04070 Tap M4 × 0,7

TDT05080 Tap M5 × 0,8

TDT06100 Tap M6 × 1,0

TDT08125 Tap M8 × 1,25

TDT10150 Tap M10 × 1,5

TDT12175 Tap M12 × 1,75

TJSE05S Screw Extractor Set With Belt Clip 5 Pieces

- **SEL01S** Screw Extractor No. 1
- **SEL02S** Screw Extractor No. 2
- **SEL03S** Screw Extractor No. 3
- **SEL04S** Screw Extractor No. 4
- **SEL05S** Screw Extractor No. 5

TTEX23N Nut Driver & Hex/TX T-Handle Set FOAM4X4 23 Pieces

5105025 T Handle Ball Point Hex Key Metric 2.5 mm

510503	T Handle Ball Point Hex Key Metric 3 mm
510504	T Handle Ball Point Hex Key Metric 4 mm
510505	T Handle Ball Point Hex Key Metric 5 mm
510506	T Handle Ball Point Hex Key Metric 6 mm
510507	T Handle Ball Point Hex Key Metric 7 mm
510508	T Handle Ball Point Hex Key Metric 8 mm
520010	T Handle Ball Point TX Key TX10
520015	T Handle Ball Point TX Key TX15
520020	T Handle Ball Point TX Key TX20
520025	T Handle Ball Point TX Key TX25
520027	T Handle Ball Point TX Key TX27
520030	T Handle Ball Point TX Key TX30
520040	T Handle Ball Point TX Key TX40
MDN505	Nut Driver 5 mm
MDN5055	Nut Driver 5.5 mm
MDN506	Nut Driver 6 mm
MDN507	Nut Driver 7 mm
MDN508	Nut Driver 8 mm
MDN510	Nut Driver 10 mm
MDN511	Nut Driver 11 mm
MDN512	Nut Driver 12 mm
MDN513	Nut Driver 13 mm