Max. 205 m³/h

DC axial fans

☐ 119 x 38 mm



- **Material:** Housing: GRP[1] (PBT)
  Impeller: GRP[1] (PA)
- **Direction of air flow:** Exhaust over struts
- **Direction of rotation:** Clockwise, looking towards rotor
- **Connection:** Via single wires AWG 24, TR 64
- **Weight:** 270 g

- **Possible special versions:**
  (See chapter DC fans - specials)
  - Speed signal
  - Go / NoGo alarm
  - Alarm with speed limit
  - External temperature sensor
  - Internal temperature sensor
  - PWM control input
  - Analog control input
  - Moisture protection
  - Degree of protection: IP 54

1) Fiberglass-reinforced plastic

Series 4400 **Nominal data**	Air flow	Air flow	**Nominal voltage**	Voltage range	Sound pressure level	Sound power level	Sintec sleeve bearings Ball bearings	Power consumption	Nominal speed	Temperature range	Service life L_{10} (40 °C) ebm-papst standard Service life L_{10} (T_{max}) ebm-papst standard	Life expectancy L_{10IPC} (40 °C) see page 17	Curve
Type	**m³/h**	**cfm**	**VDC**	**VDC**	**dB(A)**	**Bel(A)**	**□ / ■**	**Watts**	**rpm⁻¹**	**°C**	**Hours**	**Hours**	
4412 L	150	88	**12**	7...14	37	5.0	■	2.2	2 700	-20...+80	67 500 / 22 500	115 000	③
4412 ML	168	99	**12**	7...15	40	5.1	■	3.0	3 000	-20...+80	67 500 / 22 500	115 000	④
4412 M	184	108	**12**	7...14	42	5.3	■	3.8	3 300	-20...+75	65 000 / 25 000	110 000	⑤
4412 N	205	121	**12**	7...14	46	5.6	■	5.3	3 650	-20...+70	62 500 / 30 000	105 000	⑥
4414 L3	100	59	**24**	12...28	26	4.0	■	1.0	1 800	-20...+80	75 500 / 22 500	127 500	①
4414 LL	124	73	**24**	12...28	33	4.5	■	1.6	2 250	-20...+80	70 000 / 22 500	117 500	②
4414 L	150	88	**24**	18...28	37	5.0	■	2.4	2 700	-20...+80	67 500 / 22 500	115 000	③
4414 ML	168	99	**24**	12...28	40	5.1	■	3.2	3 000	-20...+80	67 500 / 22 500	115 000	④
4414 M	184	108	**24**	18...28	42	5.3	■	4.1	3 300	-20...+75	65 000 / 25 000	110 000	⑤
4414 N	205	121	**24**	18...28	46	5.6	■	5.4	3 650	-20...+70	62 500 / 30 000	105 000	⑥
4418 L	150	88	**48**	36...60	37	5.0	■	2.5	2 700	-20...+75	67 500 / 27 500	115 000	③
4418 ML	168	99	**48**	36...60	40	5.1	■	3.2	3 000	-20...+75	67 500 / 27 500	115 000	④
4418 M	184	108	**48**	36...60	42	5.3	■	4.2	3 300	-20...+70	65 000 / 32 500	110 000	⑤
4418 N	205	121	**48**	36...60	46	5.6	■	5.4	3 650	-20...+70	62 500 / 30 000	105 000	⑥

Subject to change

Further variants can be found on page 59.

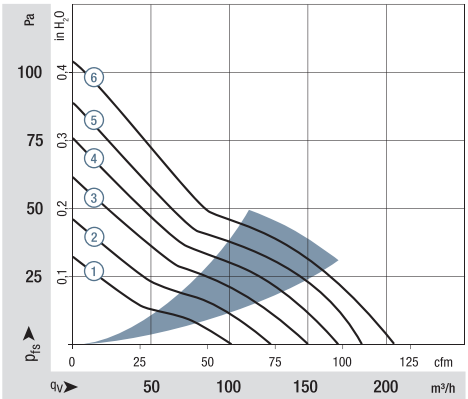

Air performance measured according to: ISO 5801.
Installation category A, without contact protection.
Noise: Total sound power level L_{WA} ISO 103002 measured on a hemisphere with a radius of 2 m.
Sound pressure level L_{pA} measured at 1 m distance from fan axis.
The values given are applicable only under the specified measuring conditions and may differ depending on the installation conditions.
In the event of deviation from the standard configuration, the parameters must be checked after installation!
For detailed information see
http://www.ebmpapst.com/general conditions

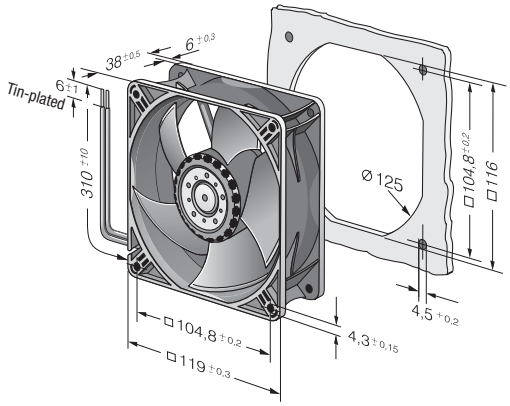

ebmpapst