OJ5016

Through-beam laser sensor transmitter

OJSLOOKG/FO/AS

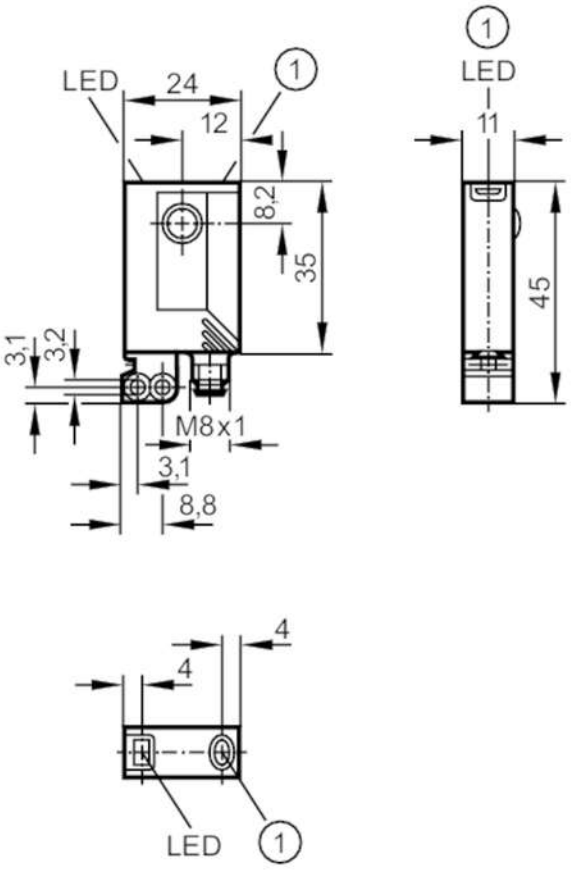

1 pushbutton

Product characteristics		
Type of light		red light
Laser protection class		1
Housing		rectangular
Application		
Function principle		Through-beam sensor
Electrical data		
Operating voltage	[V]	10...30 DC
Current consumption	[mA]	< 12
Protection class		III
Reverse polarity protection		yes
Type of light		red light
Wave length	[nm]	650
Typ. lifetime	[h]	50000
Outputs		
Overload protection		yes

OJ5016

Through-beam laser sensor transmitter

OJSLOOKG/FO/AS

Detection zone			
Transmitter / receiver		transmitter	
Range	[m]	< 15	
Range adjustable		no	
Max. light spot diameter	[mm]	24	
Light spot dimensions refer to		at maximum range	
Operating conditions			
Ambient temperature	[°C]	-10...60	
Protection		IP 67	
Tests / approvals			
EMC		EN 60947-5-2	
Laser protection class		1	
Notes on laser protection		Caution:	laser light
		laser class:	1
			EN / IEC60825-1:2007
			EN / IEC60825-1:2014
			Complies with 21 CFR 1040 except for deviations pursuant to Laser Notice No. 50, dated June 2007.
MTTF	[years]	918	
Mechanical data			
Weight	[g]	27.8	
Housing		rectangular	
Dimensions	[mm]	35 x 24 x 11	
Materials		housing: ABS; fixture: diecast zinc; LED window: SEPS; pushbutton: SEPS	
Lens material		glass	
Lens alignment		front lens	
Displays / operating elements			
Display		operation	1 x LED, green
Accessories			
Items supplied		Basic clip: 1, E20964	
		screws: 2 x M3 x 16	
		spring washers: 2	
		Nuts: 2	
Remarks			
Remarks		operating voltage "supply class 2" according to cULus	
Pack quantity		1 pcs.	

OJ5016

Through-beam laser sensor transmitter

OJSLOOKG/FO/AS

Electrical connection

Connector: 1 x M8; coding: A



Connection

