

Absolute rotary encoder

ENA58TL-S***-IO-Link

- Absolute rotary encoder of the innovative Pure Line
- Solid shaft
- IO-Link Interface for process data, parameterization and diagnosis
- Suitable for condition monitoring
- Measuring range, direction of rotation and switching signals programmable
- Free of wear magnetic sampling
- High resolution and accuracy
- Status LEDs

Function

Absolute encoders with IO Link are high precision encoders with internal magnetic sampling.
The integrated IO Link interface offers an optimal adaption to different applications through parameterization as well as process data transfer and condition monitoring.

Dimensions

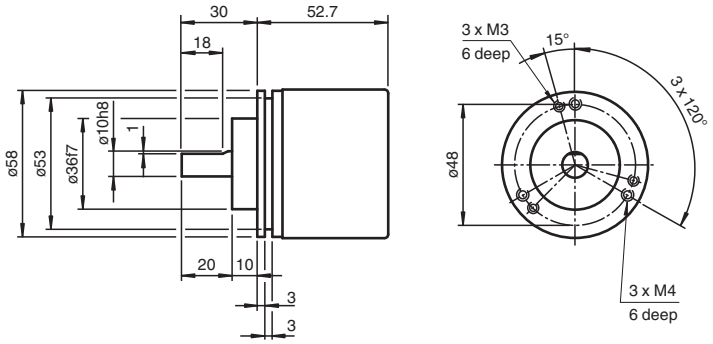

Clamping flange

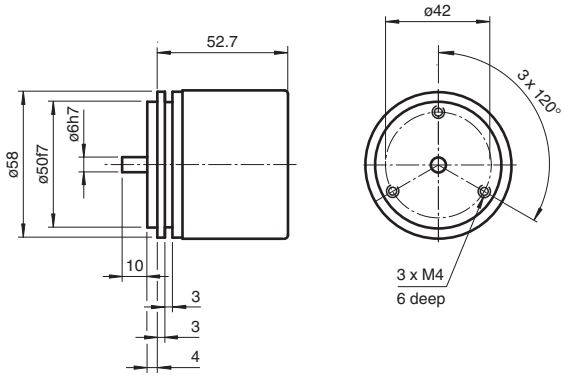

Servo flange

Release date: 2023-08-29 Date of issue: 2023-08-29 Filename: t193101_eng.pdf

Dimensions

Connections
Dimensions in mm

Connector M12

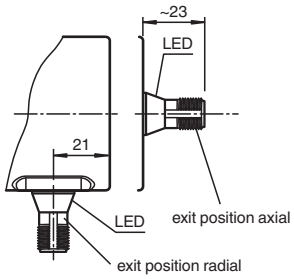

Technical Data

General specifications		
Detection type		magnetic sampling
Device type		Absolute rotary encoder as Pure Line
Measured variable		position Temperature
Linearity error		≤ ± 0.1 °
UL File Number		E223176 "For use in NFPA 79 Applications only" , if UL marking is marked on the product.
Functional safety related parameters		
$MTTF_d$		566 a at 40 °C
Mission Time (T_M)		20 a
L_{10}		420 E+8 revolutions at 40/110 N axial/radial shaft load
Diagnostic Coverage (DC)		0 %
Indicators/operating means		
LED STATUS		LED green flashing with short break (1 Hz) - IO-Link mode
Electrical specifications		
Operating voltage	U_B	18 ... 30 V DC
No-load supply current	I_0	max. 50 mA
Power consumption	P_0	approx. 1.5 W
Time delay before availability	t_v	< 1 s
Interface		
Interface type		IO-Link
IO-Link revision		1.1
Device profile		Identification and Diagnosis - I&D
Resolution		
Single turn		up to 16 Bit programmable
Multiturn		up to 15 Bit programmable
Overall resolution		up to 31 Bit programmable
Process data		Input 12 Byte - measurement value 4 Byte - resolution 16 Bit - auxiliary mesurement value 4 Byte - switching signals 2 Bit - diagnosis signals 2 Bit - status data
Vendor ID		1 (0x0001)
Device ID		5243907 (0x500403), 5243908 (0x500404), 5243911 (0x500407), 5243912 (0x500408)
Transfer rate		COM3 (230.4 kbits/s)

Release date: 2023-08-29 Date of issue: 2023-08-29 Filename: t193101_eng.pdf

Technical Data

Min. cycle time		1.5 ms
SIO mode support		no
Compatible master port type		Class A Class B (use 3-pole adapter or 3-wire cable)
Connection		
Connector		M12 connector, 5 pin , A-coded
Standard conformity		
Degree of protection		DIN EN 60529, IP65, IP67
Communication interface		IEC 61131-9 / IO-Link V1.1.2
Climatic testing		DIN EN 60068-2-78, no moisture condensation
Emitted interference		EN 61000-6-4:2007
Noise immunity		EN 61000-6-2:2005
Shock resistance		DIN EN 60068-2-27, 100 *g*, 6 ms
Vibration resistance		DIN EN 60068-2-6, 10 *g*, 10 ... 1000 Hz
Approvals and certificates		
UL approval		cULus Listed, General Purpose, Class 2 Power Source , if UL marking is marked on the product.
Ambient conditions		
Operating temperature		-40 ... 85 °C (-40 ... 185 °F)
Storage temperature		-40 ... 85 °C (-40 ... 185 °F)
Relative humidity		98 % , no moisture condensation
Mechanical specifications		
Material		
Housing		Zinc plated steel, painted
Flange		Aluminum
Shaft		Stainless steel
Mass		approx. 350 g
Rotational speed		max. 12000 min $^{-1}$
Moment of inertia		< 30 gcm^2
Starting torque		< 3 Ncm
Shaft load		
Axial		40 N
Radial		110 N

Connection

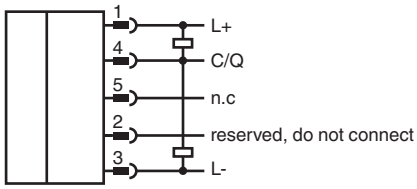

Connection Assignment

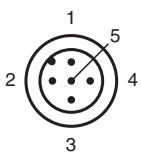

Release date: 2023-08-29 Date of issue: 2023-08-29 Filename: t193101_eng.pdf

Accessories

	**ICE1-8IOL-G60L-V1D**	Ethernet IO-Link module with 8 inputs/outputs
	**V1-G-0,6M-PUR-V1-G**	Cordset M12 socket straight to M12 plug straight A-coded, 4-pin, PUR cable grey
	**V15-G-1M-PUR-V15-G**	Cordset M12 socket straight to M12 plug straight A-coded, 5-pin, PUR cable grey
	**9401 6*10**	Spring steel coupling
	**9401 6*6**	Spring steel coupling
	**9402 6*6**	Spring steel coupling
	**9404 6*6**	Spring disk coupling
	**9409 6*10**	Bellows coupling
	**9409 6*6**	Bellows coupling
	**9409 6*8**	Bellows coupling
	**9410 6*6**	Precision coupling
	**KW-6/10**	Helical coupling
	**KW-6/6**	Helical coupling
	**KW-6/8**	Helical coupling
	**9108, 6**	Measuring wheel
	**9109, 6**	Measuring wheel for shaft diameter 6 mm
	**9110, 6**	Measuring wheel for shaft diameter 6 mm
	**9113, 6**	Measuring wheel for shaft diameter 6 mm
	**MBT-36ALS**	Spring-loaded mounting bracket with a diameter of 36 mm
	**MBT-36ALS120**	Spring arm for larger spring deflections for diameter 58 rotary encoder with clamping flange

Release date: 2023-08-29 Date of issue: 2023-08-29 Filename: t193101_eng.pdf

Accessories

	**ICE1-8IOL-G30L-V1D**	Ethernet IO-Link module with 8 inputs/outputs
	**ICE2-8IOL-G65L-V1D**	EtherNet/IP IO-Link master with 8 inputs/outputs
	**ICE3-8IOL-G65L-V1D**	PROFINET IO IO-Link master with 8 inputs/outputs
	**ICE2-8IOL-K45S-RJ45**	EtherNet/IP IO-Link master with 8 inputs/outputs, DIN rail, screw terminal
	**ICE3-8IOL-K45P-RJ45**	PROFINET IO IO-Link master with 8 inputs/outputs, DIN rail, push-in terminals
	**ICE3-8IOL-K45S-RJ45**	PROFINET IO IO-Link master with 8 inputs/outputs, DIN rail, screw terminal
	**IO-Link-Master02-USB**	IO-Link master, supply via USB port or separate power supply, LED indicators, M12 plug for sensor connection
	**ICE2-8IOL-K45P-RJ45**	EtherNet/IP IO-Link master with 8 inputs/outputs, DIN rail, push-in connectors

Release date: 2023-08-29 Date of issue: 2023-08-29 Filename: t193101_eng.pdf

Type Code

Parameterization status
01 P+F factory setting

Connection type
ABD axial connection alignment, M12 x 1, 5-pin, A-coded
RBD radial connection alignment, M12 x 1, 5-pin, A-coded

Interface, electric
IO IO-Link

Singleturn resolution
16 programmable up to 16 bit

Multiturn resolution
00 Singleturn rotary encoder
15 Multiturn rotary encoder, programmable up to 15 bit

Degree of protection
5 IP65
7 IP66, IP67

Flange
CA Clamping flange
SA Servo flange

Shaft diameter
06 6 mm
10 10 mm

Shaft type
S Solid shaft

Version
TL Target Line

Size
58 Housing diameter: 58 mm

Device type
ENA Absolute rotary encoder

Release date: 2023-08-29 Date of issue: 2023-08-29 Filename: t193101_eng.pdf