

Q4X Series

Versatile, Rugged Laser Distance Sensor

Superior Performance: Reliably detects sub-millimeter distance changes.

Versatile
Reliable **measurement up to 300 mm** across a variety of target colors, materials and surfaces with multiple sensing modes in one device.

Durable
Robust housing rated to IP69K with **FDA-grade stainless steel** resists mechanical impact, over tightening and extreme vibration.

Easy-to-Use
Simplified user experience with a **distance (mm) or analog (V or mA) readout** from the angled four-digit display and easy setup with responsive buttons.

discrete analog

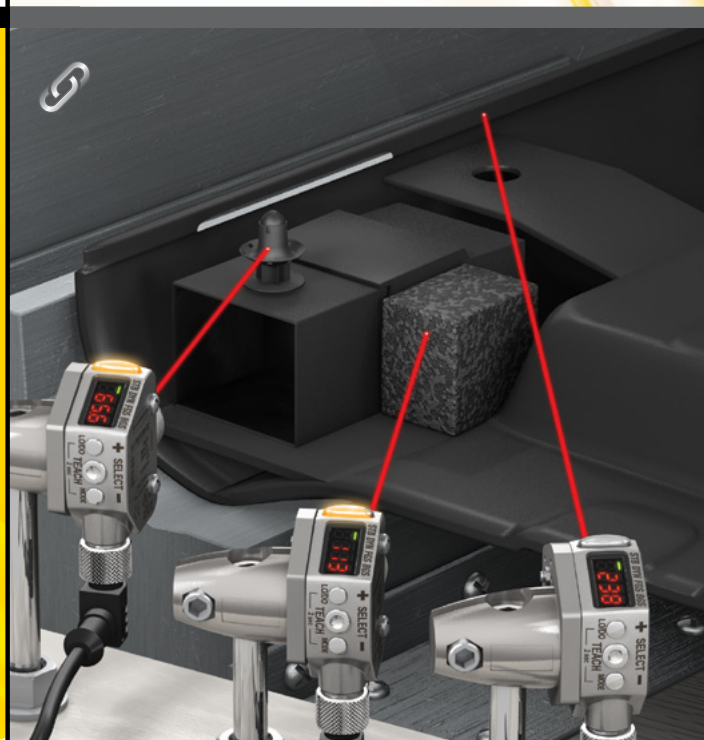

BANNER®
more sensors, more solutions

Easy-to-Use. Problem Solver.

Reliable, durable sensor that solves even the most challenging applications

Compact housing to fit in tight spaces with industry standard 18 mm thread for quick installation

Bright output indicator and real-time distance feedback of distance (mm) or analog output (0-10 V, 4-20 mA) provides easy setup and troubleshooting, leading to reduced installation costs



Robust FDA grade stainless steel housing for even the most demanding environments IP67, IP68, IP69K

Class 1 laser with small, highly visible, laser spot for easy alignment and small object detection

Remote input allows for adjustments such as delay timers, remote input and advanced measurement modes to expand the range of applications solved with a single sensor

Sensing Range	Performance		Spot Size
	Discrete Minimum Object Detection	Analog Minimum Resolution	
Q4XT...100-Q8			
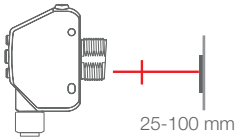 25-100 mm	0.5 mm (from 25-45 mm)	0.15 mm (from 25-100 mm)	0.7 x 1.8 mm (at 100 mm)
Q4XT...300-Q8			
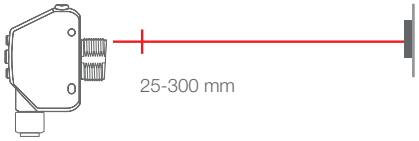 25-300 mm	1.0 mm (from 25-50 mm)	0.3 mm (from 25-100 mm)	0.8 x 2.0 mm (at 300 mm)

Presence/Absence

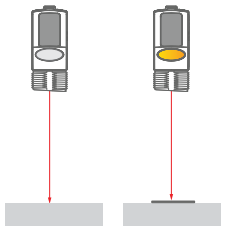

Distance-based presence/absence detection or part positioning regardless of color or reflectivity of object and background



The Q4X detects the small change in height on multicolored candy bars. The display, with decimal point, can show distance from the sensor or relative to the conveyor.

Error-Proofing

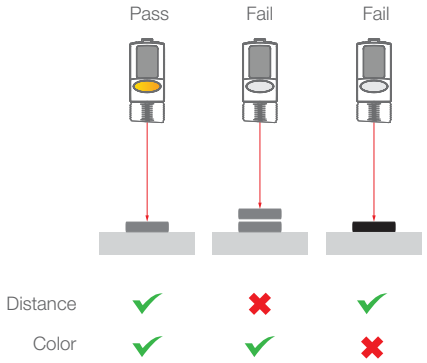

Inspections use distance to verify parts presence and position, and intensity to verify correct color or part orientation

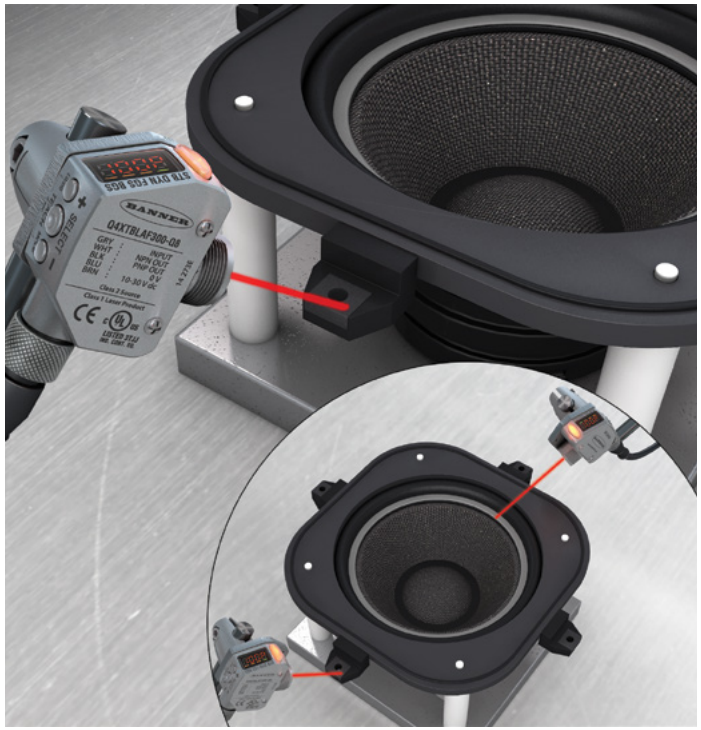

The Q4X verifies presence of a single spacer while also monitoring intensity to verify adhesive side is down. Master/slave mode provides cross talk avoidance when using multiple sensors in close proximity.

Clear Object Detection

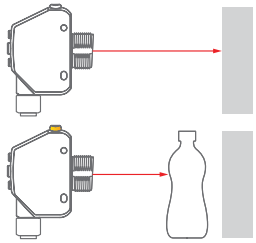

Reliably detects transparent objects without the need of a retro reflector



The Q4X detects the presence of a clear bottle with an irregular surface. Built in delay timers make it easy to regulate product flow on production lines and increase efficiency.

Measurement

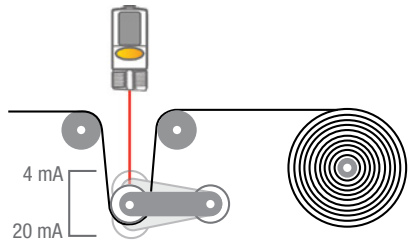

Analog output for continuous measurement of part size or position

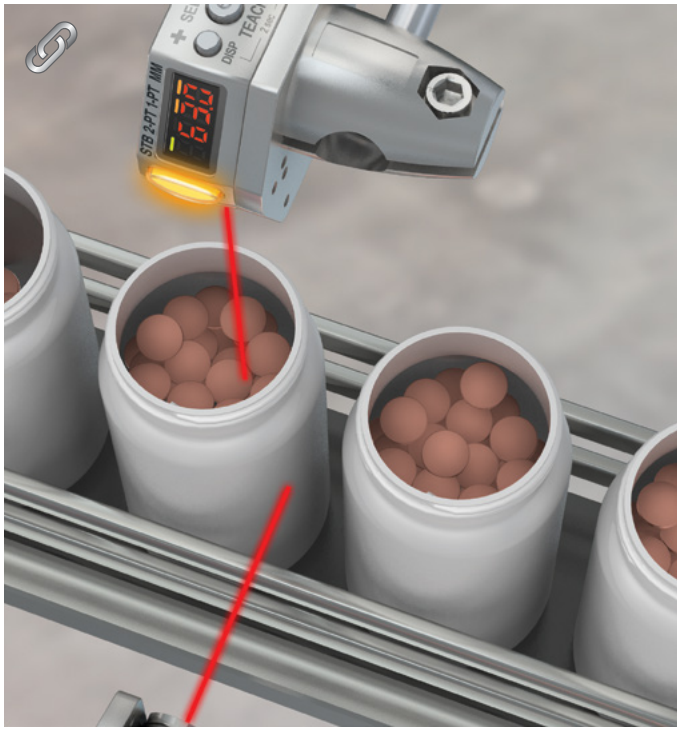

The Q4X analog sensor uses its averaging trigger mode to provide a more consistent fill level measurement across inconsistent surfaces, such as pills inside a bottle.



Q4X Laser Distance Sensor

Family	Housing Style	Output	Mode	Range		Connector
Q4X	**T**	**B**	**LAF**	**300**	—	**Q8**
	T = 18 mm Threaded Barrel	**B** = Bipolar NPN & PNP **U** = 0 to10 V **I** = 4 to 20 mA	**LAF** = Laser Adjustable-Field	**300** = 25-300 mm **100** = 25-100 mm		**Q8** = 5-pin Integral QD *QD models require mating cordset*

Order Now



Sensing Beam	Visible red Class 1 laser, 655 nm
Supply Voltage	Discrete: 10 to 30 V dc Analog: 12 to 30 V dc
Response Speed	User selectable as fast as Discrete:1.5 ms Analog: 0.5 ms
Vibration	MIL-STD-202G, Method 201A (10 to 60 Hz, 0.06 in (1.52 mm) double amplitude, 2 hours each along X, Y and Z axes), with sensor operating
Shock	MIL-STD-202G, Method 213B, Condition I (100G 6x along X, Y and Z axes, 18 total shocks), with sensor operating

Operating Condition	Discrete: -10 to +55 ˚C Analog: -10 to +50 ˚C
Environmental Rating	IP67, IP68, IP69K
Construction	Housing: 316L stainless steel Lens cover: PMMA acrylic Indicator & Display Window: Polysulfone
Certifications	patent pending

ECOLAB is a registered trademark of Ecolab USA Inc. All rights reserved.

Accessories

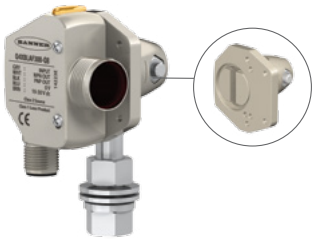

SMBQ4XFA
includes 3/8" bolt for mounting

SMBQ4XFAM10
includes 10 mm bolt for mounting

SMBQ4XFAM12
clamps directly onto industry standard bracket systems of 1/2" or 12 mm rods



SMB18A
12-ga. stainless steel



SMBAMS18P
12-ga. cold-rolled steel



SMBAMS18RA
12-ga. cold-rolled steel

Cordsets for Analog Models
(0 to 10 V, 4 to 20 mA)



5-Pin M12/ Euro-Style Cordsets with shield
Straight connector models listed; for right-angle, add **RA** to the end of the model number (example, **MQDEC2-506RA)**

MQDEC2-506
2 m (6.5')
MQDEC2-515
5 m (15')
MQDEC2-530
9 m (30')



5-Pin M12/ Euro-Style Washdown Cordsets (IP68) with shield
Straight connector models only

MQDCWD-506
2 m (6.5')
MQDCWD-530
9 m (30')

Cordsets for Discrete Models
(Bipolar NPN & PNP)



5-Pin M12/ Euro-Style Cordsets
Straight connector models listed; for right-angle, add **RA** to the end of the model number (example, **MQDC1-506RA)**

MQDC1-506
2 m (6.5')
MQDC1-515
5 m (15')
MQDC1-530
9 m (30')



5-Pin M12/ Euro-Style Washdown Cordset (IP69K)
Straight connector models only

MQDC-WDSS-0506
2 m (6.5')
MQDC-WDSS-0515
5 m (15')
MQDC-WDSS-0530
9 m (30')



Q4X Laser Distance Sensor

Link to data sheets

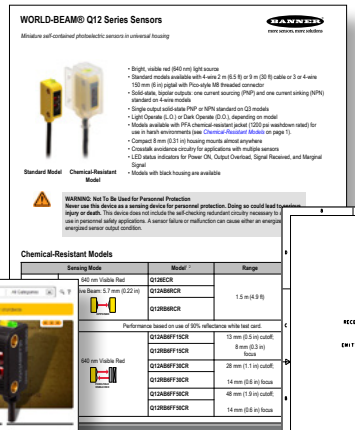

Link to catalog



Link to the Banner website



Link to CAD files

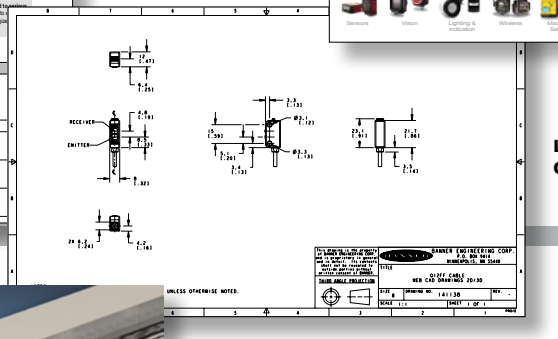

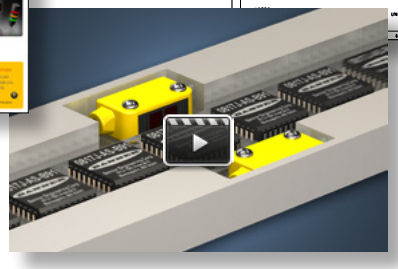

Link to videos

© 2015 Banner Engineering Corp. Mpls, MN USA

Talk with an app engineer. Get product specs. Order now.

1-888-373-6767 • bannerengineering.com

minneapolis, mn

BANNER®
more sensors, more solutions