finder®
SWITCH TO THE FUTURE

39
SERIES

MasterINTERFACE - Relay interface modules 0.1 - 2 - 6 A

- Packaging machines
- Bottling plant
- Traffic light controls
- Carousel warehouses
- Control panels
- Panels for electrical distribution
- Labelling machines
- Hoists and cranes

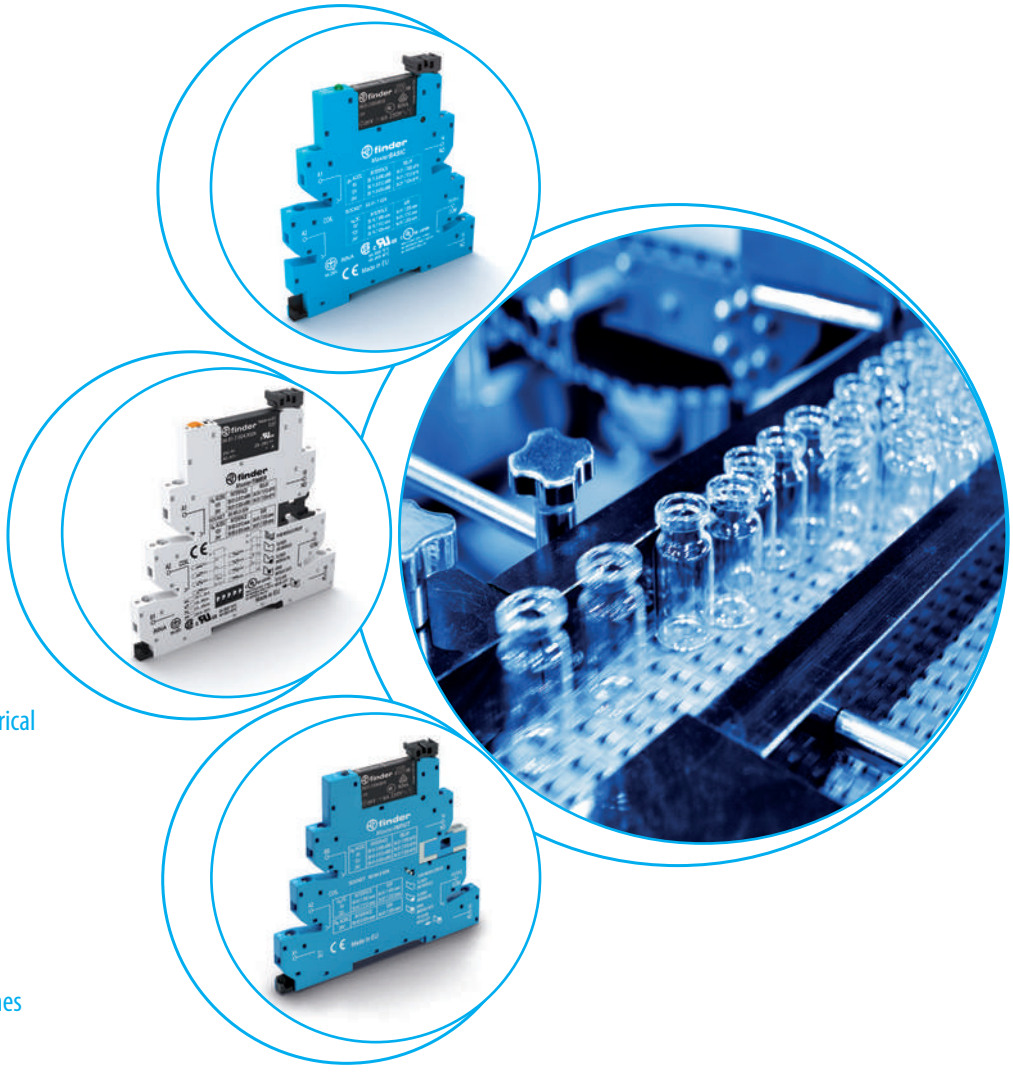

FINDER reserves the right to alter characteristics at any time without notice. FINDER assumes no liability for damage to persons or property, caused as a result of the incorrect use or application of its products.

B

Common features

- Space saving 6.2 mm wide
- Connections for 16-way jumper link
- Integral coil indication and protection circuit
- Secure retention and easy ejection by plastic clip
- Dual screw head (blade+cross) terminals and Push-in terminals versions
- 35 mm rail mounting (EN 60715)

EMR
Electromechanical Relays

- **1 CO 6 A/250 V AC**
- High switching capability

SSR
Solid State Relays

- 1 solid state output (options **0.1 A/48 V DC, 6 A/24 V DC, 2 A/240 V AC**)
- Silent, high speed switching, long electrical life

*Master**BASIC***

- For general use in any type of system
- **EMR: 6 to 24 and 125 V AC/DC, 230 V AC upply**
- **SSR: 6 to 24 V DC, 125 V AC/DC, 230 V AC supply**
- Screw terminal and Push-in terminal

*Master**BASIC*** - EMR ATEX

- Available on request - See page 16

39.11/39.01



Page 6

39.10/39.00



Page 7

*Master**PLUS***

- Accepts the output fuse module, for the easy and space efficient protection of output circuits
- **EMR: 6 to 125 V AC/DC, 125 and 220 V DC, 230 V AC and 24...240 V AC/DC supply**
- **SSR: 24 - 125 V AC/DC, 6 to 220 V DC, 230 V AC and 24...240 V AC/DC supply**
- **Special 125 V AC/DC and 230 V AC leakage current suppression types (39.31.3, 39.61.3 EMR and 39.30.3, 39.60.3 SSR)**
- Screw terminal and Push-in terminal

39.31 - 39.31.3/39.61 - 39.61.3

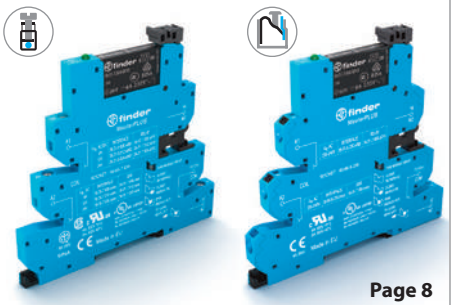

Page 8

39.30 - 39.30.3/39.60 - 39.60.3



Page 9

*Master**INPUT***

- Jumper link option for the quick and easy distribution of supply voltage to proximity switches and similar input devices
- **EMR: 6 to 24 V and 125 V AC/DC, 230 V AC supply**
- **SSR: 6 - 24 V DC, 24 - 125 V AC/DC, 230 V AC supply**
- Screw terminal and Push-in terminal

39.41/39.71



Page 10

39.40/39.70



Page 11

*Master**OUTPUT***

- Jumper link option for the quick and easy distribution of supply voltage to output side and its connection to electromagnetic valves and similar output devices
- **EMR: 6 to 24 V and 125 V AC/DC, 230 V AC supply**
- **SSR: 6 to 24 V DC, 125 V AC/DC, 230 V AC supply**
- Screw terminal and Push-in terminal

39.21/39.51



Page 12

39.20/39.50



Page 13

*Master**TIMER***

- Timer adjustment via top mounted rotary knob accessible after assembly
- Control signal terminal
- DIP-switch for selection of 4 time scales and 8 functions
- Output with fuse module option
- **EMR and SSR: 12 to 24 V AC/DC supply**
- Screw terminal and Push-in terminal

39.81/ 39.91

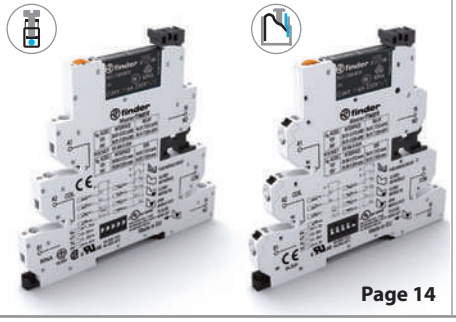

Page 14

39.80/39.90

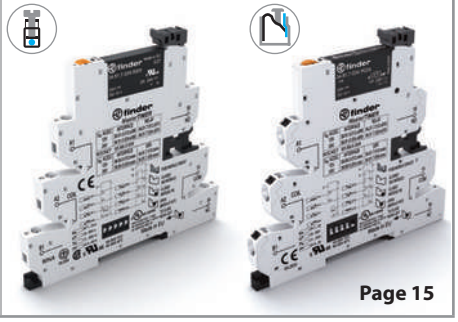

Page 15

B

*Master**BASIC***
39.11 - 39.10 - 39.01 - 39.00

- For general interface use in any type of system and application.
- Can be used for input interface applications between auxiliary contacts, sensors etc. and controllers, PLC's or motors. Or for output interface between PLC's controllers and relays, solenoids etc.

*Master**PLUS***
39.31 - 39.30 - 39.31.3 - 39.30.3 - 39.61 - 39.60 - 39.61.3 - 39.60.3

- This special version provides extra protection for the output circuit thanks to the replaceable fuse module.
- For general interface use in any type of system and application.
- Can be used for input interface applications between auxiliary contacts, sensors etc. and controllers, PLC's or motors. Or for output interface between PLC's controllers and relays, solenoids etc.

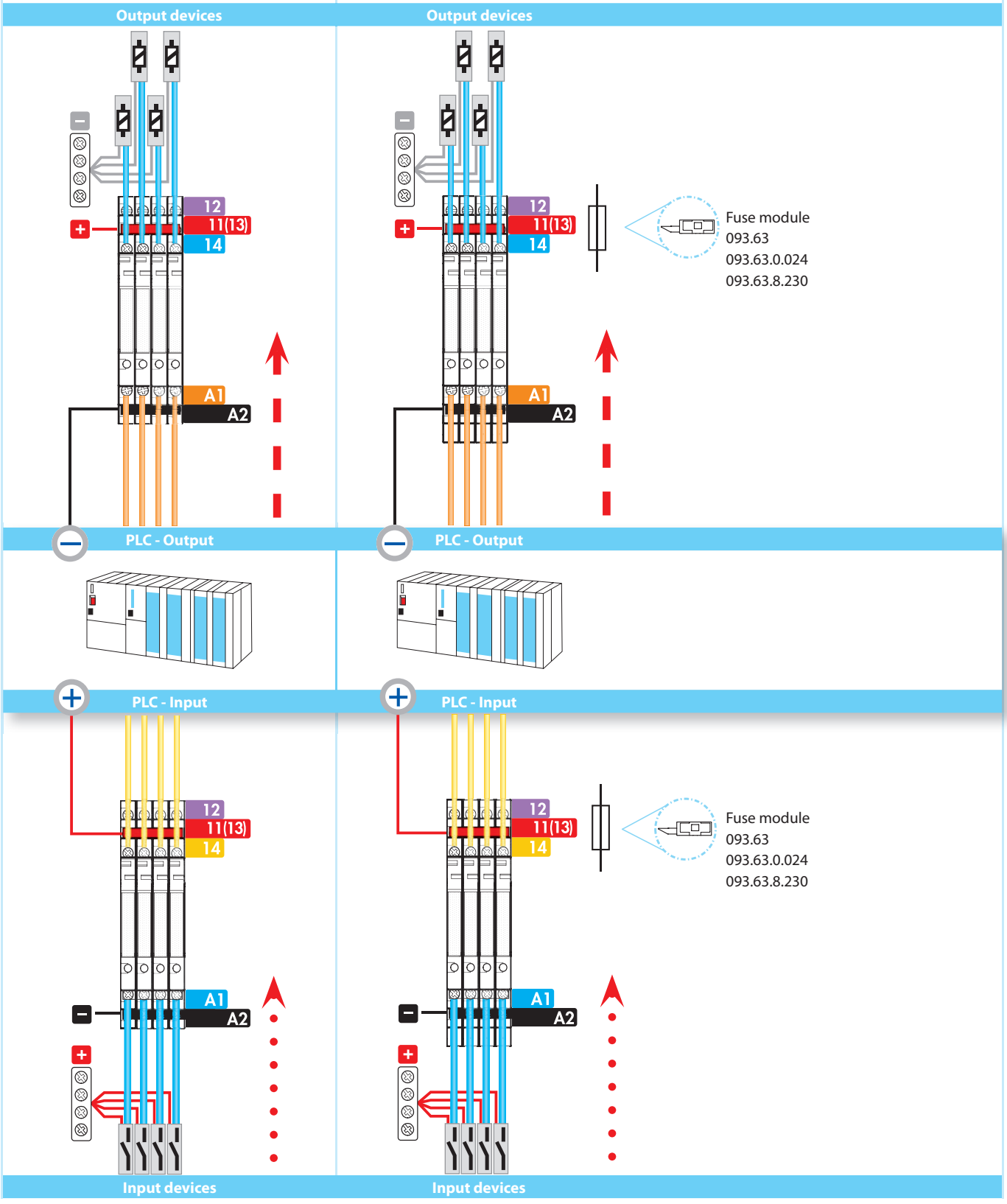

X-2017, www.findernet.com

B

*Master**INPUT***
39.41 - 39.40 - 39.71 - 39.70

- These models allow the full termination of input device to the interface without the need for additional terminals - saving component cost, time and panel space.
- Quick and easy distribution of supply voltage through the jumper link on the Bus-Bar (BB) connection.
- Ideal for interface applications between the auxiliary contacts, sensors, limit switches and Controllers or PLC's.

*Master**OUTPUT***
39.21 - 39.20 - 39.51 - 39.50

- These models allow the full termination of output device to the interface without the need for additional terminals - saving component cost, time and panel space.
- Quick and easy distribution of supply voltage through the jumper link on the Bus-Bar (BB) connection.
- Ideal for interface applications between the PLC's or Controllers and output devices such as electomagnetic valves or motors etc..

*Master**TIMER***
39.81 - 39.80 - 39.91 - 39.90

- Slim and Multifunction Timed Interface modules.

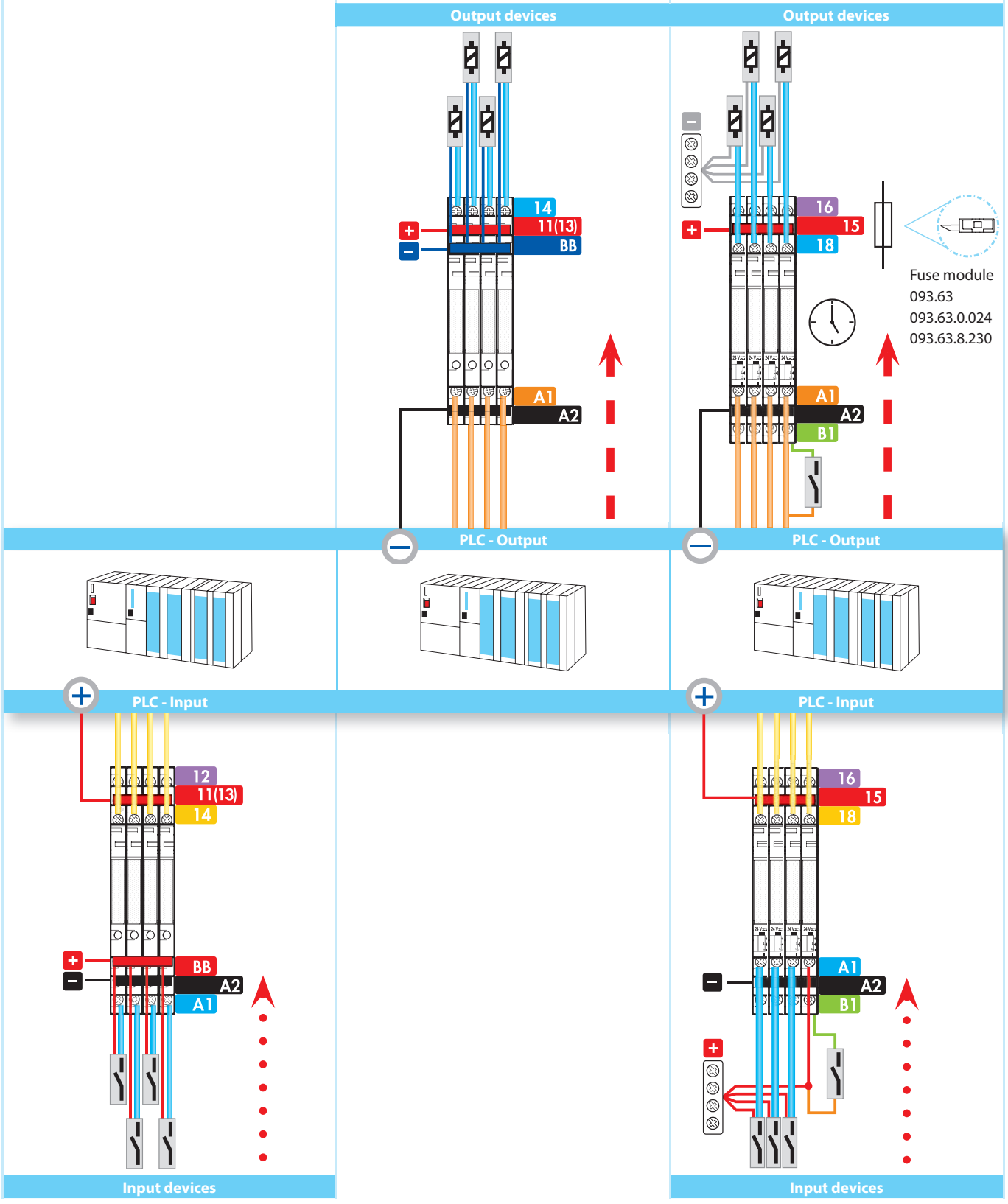

Fuse module
093.63
093.63.0.024
093.63.8.230

B

*Master**BASIC*** - EMR

1 Pole interface module, 6.2 mm wide, ideal for PLC and electronic systems

- Common connection possible with optional jumper links (terminals A1, A2 and 11)
- UL Listing (certain relay/socket combinations)

NEW **39.11/39.01**



- 6 A electromechanical relay
- 6 to 24 and 125 V AC/DC and 230 V AC supply
- Screw terminal and push-in terminal
- 35 mm rail (EN 60715) mounting

39.11
Screw terminal



39.01
Push-in terminal



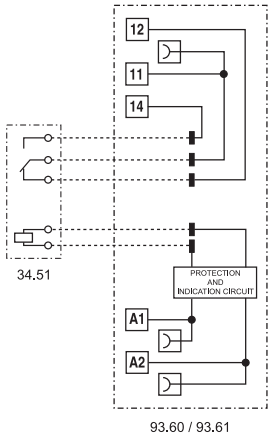

93.60 / 93.61

For outline drawing see page 25, 26

Contact specification		
Contact configuration		1 CO (SPDT)
Rated current/ Maximum peak current	A	6/10
Rated voltage/ Maximum switching voltage	V AC	250/400
Rated load AC1	VA	1500
Rated load AC15 (230 V AC)	VA	300
Single phase motor rating (230 V AC)	kW	0.185
Breaking capacity DC1: 30/110/220 V	A	6/0.2/0.12
Minimum switching load	mW (V/mA)	500 (12/10)
Standard contact material		AgNi
Supply specification		
Nominal voltage (U_N)	V AC/DC	6 - 12 - 24 - 110…125
	V AC (50/60 Hz)	220…240
Rated power	VA (50 Hz)/W	See page 20
Operating range		(0.8…1.1)U_N
Holding voltage		0.6 U_N
Must drop-out voltage		0.1 U_N
Technical data		
Mechanical life AC/DC	cycles	$10 \cdot 10^6$
Electrical life at rated load AC1	cycles	$60 \cdot 10^3$
Operate/release time	ms	5/6
Insulation between coil and contacts (1.2/50 µs)	kV	6 (8 mm)
Dielectric strength between open contacts	V AC	1000
Ambient temperature range	°C	–40…+70
Protection category		IP 20
Approvals relay (according to type)		CE cULus VDE

X-2017, www.findernet.com

*Master***BASIC - SSR**

1 Pole interface module, 6.2 mm wide, ideal for PLC and electronic systems

- Common connection possible with optional jumper links (terminals A1, A2 and 13+)
- UL Listing (certain relay/socket combinations)

NEW **39.10/39.00**



- 0.1, 2 or 6 A solid state relay
- 6 to 24 and 125 V AC/DC and 230 V AC supply
- Screw terminal and push-in terminal
- 35 mm rail (EN 60715) mounting

39.10
Screw terminal



39.00
Push-in terminal



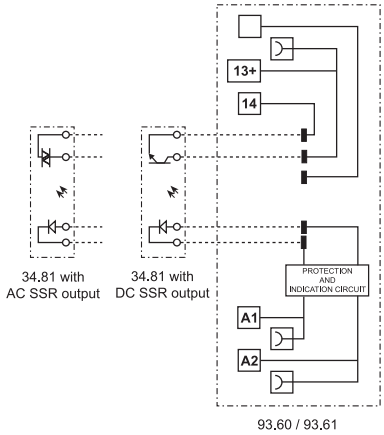

For outline drawing see page 25, 26

Output specification (SSR)		**39.x0.x.xxx.9024**	**39.x0.x.xxx.7048**	**39.x0.x.xxx.8240**
Contact configuration		1 NO (SPST-NO)		
Rated current/ Maximum peak current (10 ms)	A	6/50	0.1/0.5	2/80
Rated voltage/ Maximum blocking voltage	V	24/33 DC	48/53 DC	240/— AC
Switching voltage range	V	(1.5…33) DC	(1.5…53) DC	(12…275) AC
Repetitive peak off-state voltage	V_{pk}	—	—	800
Minimum switching current	mA	1	0.05	35
Max. "OFF-state" leakage current	mA	0.001	0.001	1.5
Max. "ON-state" voltage drop	V	0.4	1	1.6
Supply specification				
Nominal voltage (U_N)	V AC/DC	110…125		
	V AC (50/60 Hz)	220…240		
	V DC	6 - 12 - 24		
Rated power	VA (50 Hz)/W	See page 21		
Operating range		(0.8…1.1)U_N		
Must drop-out voltage		0.1 U_N		
Technical data				
Operate/release time	ms	0.2/0.6	0.04/0.6	12/12
Dielectric strength between input/output	V AC	3000		
Ambient temperature range	°C	–20…+55		
Protection category		IP 20		
Approvals relay (according to type)		CE EAC cULus		

B

*Master**PLUS*** - EMR

1 Pole interface modules, 6.2 mm wide, ideal for PLC and electronic systems

- Accepts output fuse module **093.63, 093.63.0.024, 093.63.8.230** (for 5 x 20 mm fuses) for quick and easy load protection, see page 30
- Common connection possible with optional jumper links (terminals A1, A2 and 11)
- UL Listing (certain relay/socket combinations)

NEW 39.31/39.61



- 6 A electromechanical relay
- 6 to 125 V AC/DC, 125 and 220 V DC, 230 V AC, 24…240 V AC/DC supply
- Screw terminal and push-in terminal
- 35 mm rail (EN 60715) mounting

NEW 39.31.3/39.61.3



- 6 A electromechanical relay
- Leakage current suppression version, 125 V AC/DC and 230 V AC supply
- Screw terminal and push-in terminal

39.31/39.31.3
Screw terminal



39.61/39.61.3
Push-in terminal



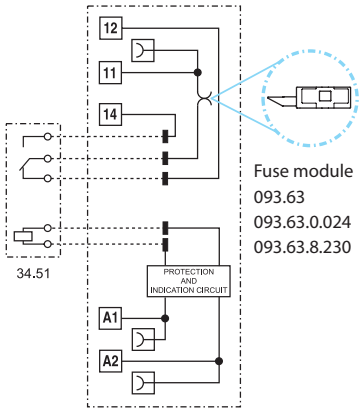

93.63 / 93.66

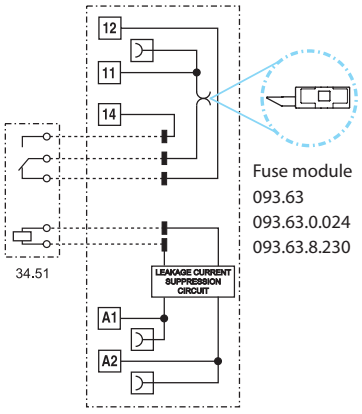

93.63.3 / 93.66.3

For outline drawing see page 25, 26

Contact specification			
Contact configuration		1 CO (SPDT)	1 CO (SPDT)
Rated current/ Maximum peak current	A	6/10	6/10
Rated voltage/ Maximum switching voltage	V AC	250/400	250/400
Rated load AC1	VA	1500	1500
Rated load AC15 (230 V AC)	VA	300	300
Single phase motor rating (230 V AC)	kW	0.185	0.185
Breaking capacity DC1: 30/110/220 V	A	6/0.2/0.12	6/0.2/0.12
Minimum switching load	mW (V/mA)	500 (12/10)	500 (12/10)
Standard contact material		AgNi	AgNi
Supply specification			
Nominal voltage (U_N)	V AC/DC	6 - 12 - 24 - 60 - 110…125 - 24…240	110…125
	V AC (50/60 Hz)	220…240	220…240
	V DC	110…125 - 220	—
Rated power	VA (50 Hz)/W	See page 20	See page 20
Operating range		$(0.8…1.1)U_N$	$(0.8…1.1)U_N$
Holding voltage		$0.6\ U_N$	$0.6\ U_N$
Must drop-out voltage		$0.1\ U_N$	$0.3\ U_N$
Technical data			
Mechanical life AC/DC	cycles	$10 \cdot 10^6$	$10 \cdot 10^6$
Electrical life at rated load AC1	cycles	$60 \cdot 10^3$	$60 \cdot 10^3$
Operate/release time	ms	5/6	5/6
Insulation between coil and contacts (1.2/50 µs)	kV	6 (8 mm)	6 (8 mm)
Dielectric strength between open contacts	V AC	1000	1000
Ambient temperature range	°C	–40…+70 (+55 for 220 V DC)	–40…+70
Protection category		IP 20	IP 20
Approvals relay (according to type)			

X-2017, www.findernet.com

*Master**PLUS*** - SSR

1 Pole interface modules, 6.2 mm wide, ideal for PLC and electronic systems

- Accepts output fuse module **093.63, 093.63.0.024, 093.63.8.230** (for 5 x 20 mm fuses) for quick and easy load protection, see page 30
- Common connection possible with optional jumper links (terminals A1, A2 and 13+)
- UL Listing (certain relay/socket combinations)

NEW **39.30/39.60**



- 0.1, 2 or 6 A solid state relay
- 24 - 125 V AC/DC, 6 to 220 V DC and 230 V AC, 24…240 V AC/DC supply
- Screw terminal and push-in terminal
- 35 mm rail (EN 60715) mounting

NEW **39.30.3/39.60.3**



- 0.1, 2 or 6 A solid state relay
- Leakage current suppression version, 125 V AC DC and 230 V AC supply
- Screw terminal and push-in terminal

39.30/39.30.3
Screw terminal



39.60/39.60.3
Push-in terminal



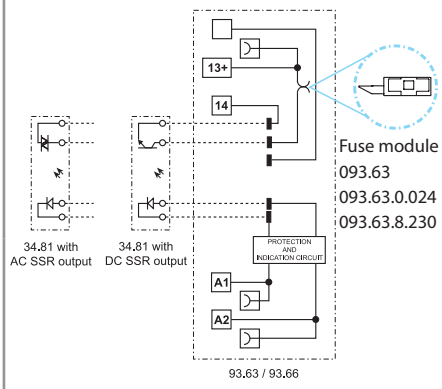

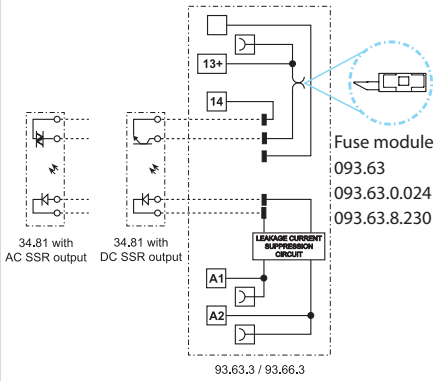

For outline drawing see page 25, 26

Output specification (SSR)		**39.x0.x.xxx.9024**	**39.x0.x.xxx.7048**	**39.x0.x.xxx.8240**	**39.x0.3.xxx.9024**	**39.x0.3.xxx.7048**	**39.x0.3.xxx.8240**
Contact configuration		1 NO (SPST-NO)			1 NO (SPST-NO)		
Rated current/ Maximum peak current (10 ms)	A	6/50	0.1/0.5	2/80	6/50	0.1/0.5	2/80
Rated voltage/ Maximum blocking voltage	V	24/33 DC	48/53 DC	240/— AC	24/33 DC	48/53 DC	240/— AC
Switching voltage range	V	(1.5…33) DC	(1.5…53)DC	(12…275) AC	(1.5…33) DC	(1.5…53)DC	(12…275) AC
Repetitive peak off-state voltage	V_{pk}	—	—	800	—	—	800
Minimum switching current	mA	1	0.05	35	1	0.05	35
Max. "OFF-state" leakage current	mA	0.001	0.001	1.5	0.001	0.001	1.5
Max. "ON-state" voltage drop	V	0.4	1	1.6	0.4	1	1.6
Supply specification							
Nominal voltage (U_N)	V AC/DC	24 - 110…125 - 24…240			110…125		
	V AC (50/60 Hz)	220…240			220…240		
	V DC	6 - 12 - 24 - 60 - 110…125 - 220			—		
Rated power	VA (50 Hz)/W	See page 21			See page 21		
Operating range		(0.8…1.1)U_N			(0.8…1.1)U_N		
Must drop-out voltage		0.1 U_N			0.3 U_N		
Technical data							
Operate/release time	ms	0.2/0.6	0.04/0.6	12/12	0.2/0.6	0.04/0.6	12/12
Dielectric strength between input/output	V AC	3000			3000		
Ambient temperature range	°C	–20…+55			–20…+55		
Protection category		IP 20			IP 20		
Approvals relay (according to type)		CE EAC cULus					

B

*Master**INPUT*** - EMR

1 Pole interface module, 6.2 mm wide, ideal for PLC and electronic systems

- Jumper link option for the quick and easy distribution of supply voltage to proximity switches and similar input devices (Bus-bar connection BB)
- Gold plated output contact as standard, for better compatibility with low energy PLC inputs
- UL Listing (certain relay/socket combinations)

NEW **39.41/39.71**



- 6 A electromechanical relay
- 6 - 12 - 24 - 125 V AC/DC and 230 V AC supply
- Screw terminal and push-in terminal
- 35 mm rail (EN 60715) mounting

39.41
Screw terminal



39.71
Push-in terminal



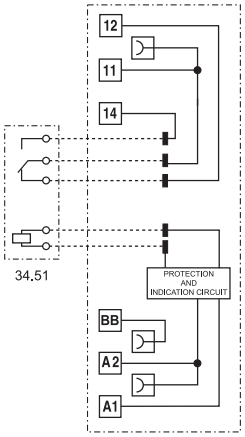

93.64 / 93.67

For outline drawing see page 25, 26

Contact specification		
Contact configuration		1 CO (SPDT)
Rated current/ Maximum peak current	A	6/10
Rated voltage/ Maximum switching voltage	V AC	250/400
Rated load AC1	VA	1500
Rated load AC15 (230 V AC)	VA	300
Single phase motor rating (230 V AC)	kW	0.185
Breaking capacity DC1: 30/110/220 V	A	6/0.2/0.12
Minimum switching load	mW (V/mA)	50 (5/2)
Standard contact material		AgNi + Au
Supply specification		
Nominal voltage (U_N)	V AC/DC	6 - 12 - 24 - 110…125
	V AC (50/60 Hz)	220…240
Rated power	VA (50 Hz)/W	See page 20
Operating range		(0.8…1.1)U_N
Holding voltage		0.6 U_N
Must drop-out voltage		0.1 U_N
Technical data		
Mechanical life AC/DC	cycles	$10 \cdot 10^6$
Electrical life at rated load AC1	cycles	$60 \cdot 10^3$
Operate/release time	ms	5/6
Insulation between coil and contacts (1.2/50 µs)	kV	6 (8 mm)
Dielectric strength between open contacts	V AC	1000
Ambient temperature range	°C	–40…+70
Protection category		IP 20
Approvals relay (according to type)		CE cULus VDE

X-2017, www.findernet.com

*Master**INPUT*** - SSR

1 Pole interface modules, 6.2 mm wide, ideal for PLC and electronic systems

- Jumper link option for the quick and easy distribution of supply voltage to proximity switches and similar input devices (Bus-bar connection BB)
- UL Listing (certain relay/socket combinations)

NEW **39.40/39.70**



- 0.1, 2 or 6 A solid state relay
- 6 - 12 - 24 V DC, 24 - 125 V AC/DC and 230 V AC supply
- Screw terminal and push-in terminal
- 35 mm rail (EN 60715) mounting

39.40
Screw terminal



39.70
Push-in terminal



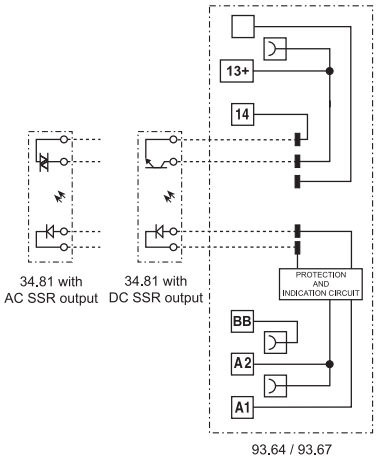

93.64 / 93.67

For outline drawing see page 25, 26

Output specification (SSR)		**39.x0.x.xxx.9024**	**39.x0.x.xxx.7048**	**39.x0.x.xxx.8240**
Contact configuration		1 NO (SPST-NO)		
Rated current/ Maximum peak current (10 ms)	A	6/50	0.1/0.5	2/80
Rated voltage/ Maximum blocking voltage	V	24/33 DC	48/53 DC	240/— AC
Switching voltage range	V	(1.5…33) DC	(1.5…53) DC	(12…275) AC
Repetitive peak off-state voltage	V_{pk}	—	—	800
Minimum switching current	mA	1	0.05	35
Max. "OFF-state" leakage current	mA	0.001	0.001	1.5
Max. "ON-state" voltage drop	V	0.4	1	1.6
Supply specification				
Nominal voltage (U_N)	V AC/DC	24 - 110…125		
	V AC (50/60 Hz)	220…240		
	V DC	6 - 12 - 24		
Rated power	VA (50 Hz)/W	See page 21		
Operating range		(0.8…1.1)U_N		
Must drop-out voltage		0.1 U_N		
Technical data				
Operate/release time	ms	0.2/0.6	0.04/0.6	12/12
Dielectric strength between input/output	V AC	3000		
Ambient temperature range	°C	–20…+55		
Protection category		IP 20		
Approvals relay (according to type)		CE EAC cULus		

B

*Master***OUTPUT** - EMR

1 Pole interface modules, 6.2 mm wide, ideal for PLC and electronic systems

- Jumper link option for the quick and easy distribution of supply voltage to output side (Bus-bar connection BB) and its connection to electromagnetic valves and similar output devices
- UL Listing (certain relay/socket combinations)

NEW **39.21/39.51**



- 6 A electromechanical relay
- 6 - 12 - 24 - 125 V AC/DC and 230 V AC supply
- Screw terminal and push-in terminal
- 35 mm rail (EN 60715) mounting

39.21
Screw terminal



39.51
Push-in terminal



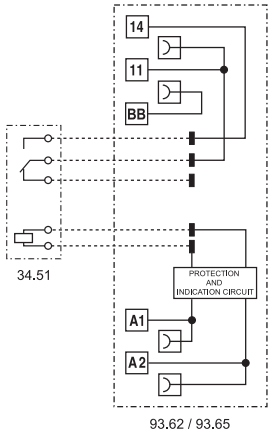

For outline drawing see page 25, 26

Contact specification		
Contact configuration		1 NO (SPST-NO)
Rated current/ Maximum peak current	A	6/10
Rated voltage/ Maximum switching voltage	V AC	250/400
Rated load AC1	VA	1500
Rated load AC15 (230 V AC)	VA	300
Single phase motor rating (230 V AC)	kW	0.185
Breaking capacity DC1: 30/110/220 V	A	6/0.2/0.12
Minimum switching load	mW (V/mA)	500 (12/10)
Standard contact material		AgNi
Supply specification		
Nominal voltage (U_N)	V AC/DC	6 - 12 - 24 - 110…125
	V AC (50/60 Hz)	220…240
Rated power	VA (50 Hz)/W	See page 20
Operating range		(0.8…1.1)U_N
Holding voltage		0.6 U_N
Must drop-out voltage		0.1 U_N
Technical data		
Mechanical life AC/DC	cycles	$10 \cdot 10^6$
Electrical life at rated load AC1	cycles	$60 \cdot 10^3$
Operate/release time	ms	5/6
Insulation between coil and contacts (1.2/50 µs)	kV	6 (8 mm)
Dielectric strength between open contacts	V AC	1000
Ambient temperature range	°C	–40…+70
Protection category		IP 20
Approvals relay (according to type)		CE cULus VDE

X-2017, www.findernet.com

*Master***OUTPUT - SSR**

1 Pole interface modules, 6.2 mm wide, ideal for PLC and electronic systems

- Jumper link option for the quick and easy distribution of supply voltage to output side (Bus-bar connection BB) and its connection to electromagnetic valves and similar output devices
- UL Listing (certain relay/socket combinations)

NEW **39.20/39.50**



- 0.1, 2 or 6 A solid state relay
- 6 to 24 V DC, 125 V AC/DC and 230 V AC supply
- Screw terminal and push-in terminal
- 35 mm rail (EN 60715) mounting

39.20
Screw terminal



39.50
Push-in terminal



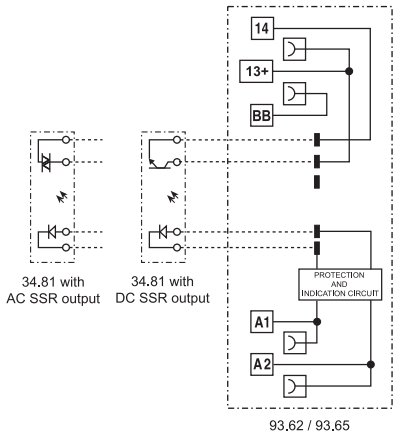

For outline drawing see page 25, 26

Output specification (SSR)		**39.x0.x.xxx.9024**	**39.x0.x.xxx.7048**	**39.x0.x.xxx.8240**
Contact configuration		1 NO (SPST-NO)		
Rated current/ Maximum peak current (10 ms)	A	6/50	0.1/0.5	2/80
Rated voltage/ Maximum blocking voltage	V	24/33 DC	48/53 DC	240/— AC
Switching voltage range	V	(1.5…33) DC	(1.5…53) DC	(12…275) AC
Repetitive peak off-state voltage	V_{pk}	—	—	800
Minimum switching current	mA	1	0.05	35
Max. "OFF-state" leakage current	mA	0.001	0.001	1.5
Max. "ON-state" voltage drop	V	0.4	1	1.6
Supply specification				
Nominal voltage (U_N)	V AC/DC	110…125		
	V AC (50/60 Hz)	220…240		
	V DC	6 - 12 - 24		
Rated power	VA (50 Hz)/W	See page 21		
Operating range		(0.8…1.1)U_N		
Must drop-out voltage		0.1 U_N		
Technical data				
Operate/release time	ms	0.2/0.6	0.04/0.6	12/12
Dielectric strength between input/output	V AC	3000		
Ambient temperature range	°C	–20…+55		
Protection category		IP 20		
Approvals relay (according to type)		CE EAC cULus		

B

*Master**TIMER*** - EMR

Slim timed interface module, 6.2 mm wide, ideal for space-saving timing solutions in panels

- Timer adjustment via top mounted rotary knob, accessible after assembly
- Control signal terminal
- DIP-switch for selection of 4 time scales and 8 functions
- Accepts output fuse module **093.63, 093.63.0.024, 093.63.8.230** (for 5 x 20 mm fuses) for quick and easy load protection, see page 30
- Common connection possible with optional jumper links (terminals A1, A2 and 15)
- UL Listing (certain relay/socket combinations)

NEW

39.81/39.91

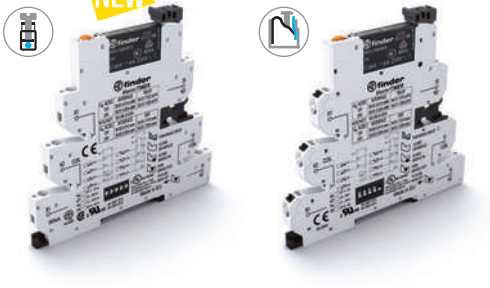

- 6 A electromechanical relay
- 12 - 24 V AC/DC supply
- Screw terminal and push-in terminal
- 35 mm rail (EN 60715) mounting

39.81
Screw terminal



39.91
Push-in terminal



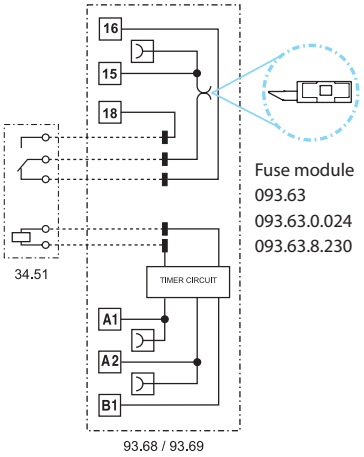

AI: On-delay
DI: Interval
GI: Pulse (0.5 s) delayed
SW: Symmetrical flasher (starting pulse on)
BE: Off-delay with control signal
CE: On- and off-delay with control signal
DE: Interval with control signal on
EE: Interval with control signal off

For outline drawing see page 25, 26

Contact specification		
Contact configuration		1 CO (SPDT)
Rated current/ Maximum peak current	A	6/10
Rated voltage/ Maximum switching voltage	V AC	250/400
Rated load AC1	VA	1500
Rated load AC15 (230 V AC)	VA	300
Single phase motor rating (230 V AC)	kW	0.185
Breaking capacity DC1: 30/110/220 V	A	6/0.2/0.12
Minimum switching load	mW (V/mA)	500 (12/10)
Standard contact material		AgNi
Supply specification		
Nominal voltage (U_N)	V AC/DC	12 - 24
Rated power AC/DC	VA (50 Hz)/W	See page 20
Operating range		$(0.8…1.1)U_N$
Holding voltage		$0.6\ U_N$
Must drop-out voltage		$0.1\ U_N$
Technical data		
Specified time range		(0.1…3)s, (3…60)s, (1…20)min, (0.3…6)h
Repeatability	%	± 1
Recovery time	ms	≤ 50
Minimum control impulse	ms	50
Setting accuracy - full range	%	5
Electrical life at rated load AC1	cycles	$60 \cdot 10^3$
Ambient temperature range	°C	–20…+50
Protection category		IP 20
Approvals relay (according to type)		CE cULus VDE

X-2017, www.findernet.com

*Master**TIMER** - SSR*

Slim timed interface module, 6.2 mm wide, ideal for space-saving timing solutions in panels

- Timer adjustment via top mounted rotary knob; accessible after assembly
- Start terminal
- DIP-switch for selection of 4 time scales and 8 functions
- Accepts output fuse module **093.63, 093.63.0.024, 093.63.8.230** (for 5 x 20 mm fuses) for quick and easy load protection, see page 30
- Common connection possible with optional jumper links (terminals A1, A2 and 15+)
- UL Listing (certain relay/socket combinations)

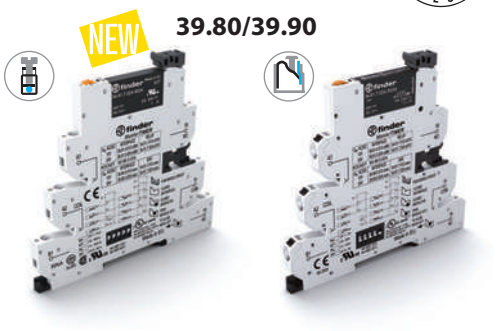

- 0.1, 2 or 6 A solid state relay
- 12 - 24 V AC/DC supply
- Screw terminal and push-in terminal
- 35 mm rail (EN 60715) mounting

39.80
Screw terminal



39.90
Push-in terminal



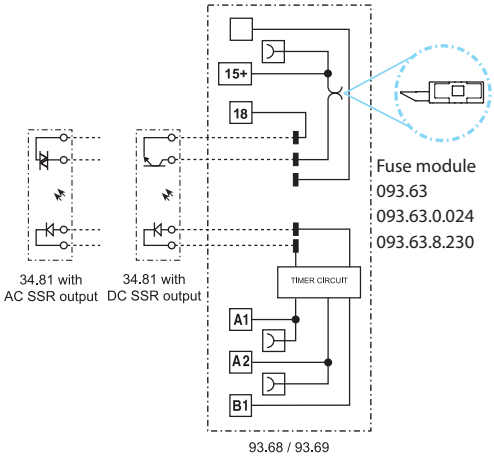

AI: On-delay
DI: Interval
GI: Pulse (0.5 s) delayed
SW: Symmetrical flasher (starting pulse on)
BE: Off-delay with control signal
CE: On- and off-delay with control signal
DE: Interval with control signal on
EE: Interval with control signal off

For outline drawing see page 25, 26

Output specification (SSR)		**39.x0.x.xxx.9024**	**39.x0.x.xxx.7048**	**39.x0.x.xxx.8240**
Contact configuration		1 NO (SPST-NO)		
Rated current/ Maximum peak current (10 ms)	A	6/50	0.1/0.5	2/80
Rated voltage/ Maximum blocking voltage	V	24/33 DC	48/53 DC	240/— AC
Switching voltage range	V	(1.5…33) DC	(1.5…53) DC	(12…275) AC
Repetitive peak off-state voltage	V_{pk}	—	—	800
Minimum switching current	mA	1	0.05	35
Max. "OFF-state" leakage current	mA	0.001	0.001	1.5
Max. "ON-state" voltage drop	V	0.4	1	1.6
Supply specification				
Nominal voltage (U_N)	V AC/DC	12 - 24		
Rated power	VA (50 Hz)/W	See page 21		
Operating range		(0.8…1.1)U_N		
Holding voltage		0.6 U_N		
Must drop-out voltage		0.1 U_N		
Technical data				
Specified time range		(0.1…3)s, (3…60)s, (1…20)min, (0.3…6)h		
Repeatability	%	± 1		
Recovery time	ms	≤ 50		
Minimum control impulse	ms	50		
Setting accuracy – full range	%	5		
Ambient temperature range	°C	–20…+50		
Protection category		IP 20		
Approvals relay (according to type)		CE EAC cULus		

B

*Master**BASIC*** - EMR ATEX

1 Pole interface module, 6.2 mm wide, ideal for PLC and electronic systems

ATEX compliant (EX nA nC)

- Electromechanical relay
- AC, DC and AC/DC Version
- Screw terminal and Push-in terminal
- UL Listed
- Cadmium free contacts
- Complies with:
  - EN 60079-0: 2012 and EN 60079-15:2010
  - 94/9/CE and 2014/34/UE
- Common connection possible with optional jumper links (terminals A1, A2 and 11) and multipole connector *Master**ADAPTER***
- 35 mm rail (EN 60715) mounting

NEW **39.11/39.01 - x073**



- 1 CO 6 A
- Screw terminal and push-in terminal
- 35 mm rail (EN 60715) mounting
- ATEX compliant

39.11
Screw terminal



39.01
Push-in terminal



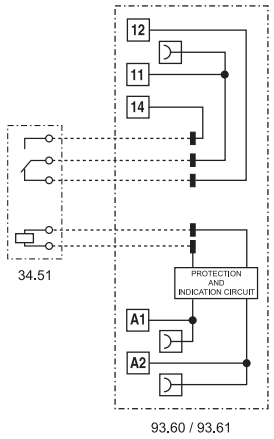

93.60 / 93.61

For outline drawing see page 25, 26

Contact specification		
Contact configuration		1 CO (SPDT)
Rated current/ Maximum peak current	A	6/10
Rated voltage/ Maximum switching voltage	V AC	250/400
Rated load AC1	VA	1500
Rated load AC15 (230 V AC)	VA	300
Single phase motor rating (230 V AC)	kW	0.185
Breaking capacity DC1: 30/110/220 V	A	6/0.2/0.12
Minimum switching load	mW (V/mA)	500 (12/10)
Standard contact material		AgNi
Coil specification		
Nominal voltage (U_N)	V AC/DC	6 - 12 - 24 - 110…125 - 24…240
	V AC (50/60 Hz)	230…240
	V DC	6 - 12 - 24
Rated power AC/DC	VA (50 Hz)/W	See page 20
Operating range		$(0.8…1.1)U_N$
Holding voltage		$0.6\ U_N$
Must drop-out voltage		$0.1\ U_N$
Technical data		
Mechanical life AC/DC	cycles	$10 \cdot 10^6$
Electrical life at rated load AC1	cycles	$60 \cdot 10^3$
Operate/release time	ms	5/6
Insulation between coil and contacts (1.2/50 µs)	kV	6 (8 mm)
Dielectric strength between open contacts	V AC	1000
Ambient temperature range	°C	–40…+70
Protection category		IP 20
Approvals relay (according to type)		CE Ex cULus

X-2017, www.findernet.com

Ordering information ATEX versions

Example: 39 series, screw terminals interface module, electromechanical relay output, 1 CO 6 A, 24 V DC, ATEX Version.

								A	B	C	D		
3	9	.	1	1	.	7	.	0	2	4	.	0	0	7	3

Series

Type
0 = Push-in terminals
35 mm rail (EN 60715) mount
1 = Screw terminals
35 mm rail (EN 60715) mount

No. of poles
1 = 1 CO, 6 A

Coil version
0 = AC/DC
7 = DC sensitive
8 = AC (50/60 Hz)

Coil voltage
See coil specifications

A: Contact material
0 = AgNi Standard
5 = AgNi + Au

B: Contact circuit
0 = CO (nPDT)

C - D: Option
73 = ATEX
Complaiant (Ex nA nC)

Other data ATEX versions

Max current @ 70 °C		Single piece mount	> 8 piece mount
Type 39.11/01	A	6	5
Type 39.11/01 (110…125)V AC/DC only	A	6	4
Terminals		**Screw terminals**	**Push-in Terminals**
Wire strip length	mm	10	8
Screw torque	Nm	0.5	—
Min. wire size		solid and stranded cable	solid and stranded cable
	mm²	0.5	0.5
	AWG	21	21
Max. wire size		solid and stranded cable	solid and stranded cable
	mm²	1 x 2.5	1 x 2.5
	AWG	1 x 14	1 x 14

Markings - ATEX versions - ATEX, II 3G Ex nA nC IIC Gc

MARKING	
Specific marking of explosion protection	
II Component for surface plant (different from mines)	
3 Category 3: normal level of protection	
GAS	**G** Explosive atmosphere due to presence of combustible gas vapour or mist
	Ex nA Non-sparking equipment
	Ex nC Sealed device (type of protection for category 3G)
	IIC Gas group
	Gc Equipment Protection Level
–40 °C ≤ Ta ≤ +70 °C Ambient temperature	
EPT 15 ATEX 0194 U EPT: laboratory which issues the CE type certificate 15: year of issue of certificate 0194: number of CE type certificate U: ATEX component	

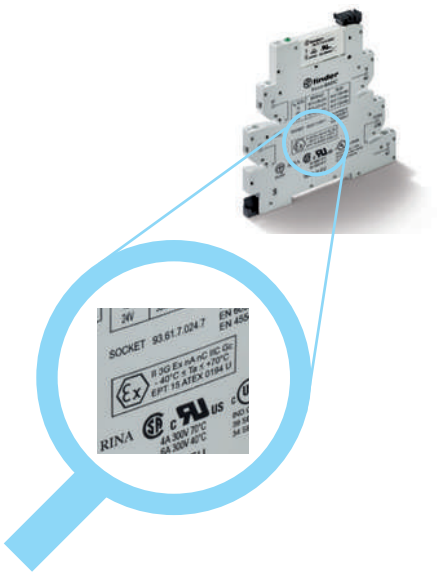

B

Ordering information

Example: *Master**PLUS*** 39 series screw terminal interface module, electromechanical relay output, 1 CO (SPDT), 24 V AC/DC coil.

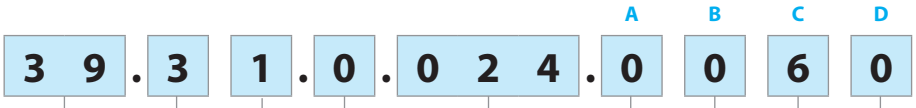

Series

Type

1 = *Master**BASIC***, screw terminal
0 = *Master**BASIC***, push-in terminal
3 = *Master**PLUS***, screw terminal, fuse-protectable output
6 = *Master**PLUS***, push-in terminal, fuse-protectable output
4 = *Master**INPUT***, screw terminal
7 = *Master**INPUT***, push-in terminal
2 = *Master**OUTPUT***, screw terminal
5 = *Master**OUTPUT***, push-in terminal
8 = *Master**TIMER*** multifunction, screw terminal, fuse-protectable output
9 = *Master**TIMER*** multifunction, push-in terminal, fuse-protectable output

No. of poles

1 = 1 CO (only EMR, except 39.21/51, 1 NO)
0 = 1 NO (only SSR)

Coil version, EMR / Input version, SSR

0 = AC (50/60 Hz)/DC
3 = Leakage current suppression AC (50/60 Hz)
7 = DC sensitive
8 = AC (50/60 Hz)

Coil voltage, EMR/Input voltage, SSR

See page 20

D: Special Version, EMR
0 = Standard

C: Options, EMR
6 = Standard

B: Contact circuit, EMR
0 = CO (except 39.21/51, 1 NO)

A: Contact material, EMR
0 = AgNi Standard
4 = $AgSnO_2$
5 = AgNi + Au

ABCD: Output version, SSR
7048 = 0.1 A - 48 V DC
8240 = 2 A - 230 V AC
9024 = 6 A - 24 V DC

EMR - Selecting features and options: only combinations in the same row are possible.
Preferred selections for best availability are shown in **bold.**

Type	Coil version	A	B	C	D
39.11/01	0.006 - 0.012	**0** - 4 - 5	**0**	**6**	**0**
	0.024 - 0.125 - **8.230**				
39.31/61	0.006 - 0.012	**0** - 4 - 5	**0**	**6**	**0**
	0.024 - 0.060				
	0.125 - 0.240 - **8.230**				
	7.125 - 7.220				
	3.125 - 3.230				
39.41/71	0.006 - 0.012	0 - 4 - **5**	**0**	**6**	**0**
	0.024 - 0.125				
	8.230				
39.21/51	0.006 - 0.012	**0** - 4 - 5	**0**	**6**	**0**
	0.024 - 0.125				
	8.230				
39.81/91	0.012 - **0.024**	**0**	**0**	**6**	**0**

SSR - Selecting features and options: only combinations in the same row are possible.
Preferred selections for best availability are shown in **bold.**

Type	Input version	Output version, ABCD
39.10/00	7.006 - 7.012	7048 - 8240 - **9024**
	7.024 - 0.125 - **8.230**	
39.30/60	7.006 - 7.012	7048 - 8240 - **9024**
	7.024 - 7.060	
	7.125 - 7.220	
	0.024 - 0.125 - 0.240	
	8.230	
	3.125 - 3.230	
39.40/70	7.006 - 7.012	7048 - 8240 - **9024**
	7.024 - 0.024 - 0.125	
	8.230	
39.20/50	7.006 - 7.012	7048 - 8240 - **9024**
	7.024 - 0.125	
	8.230	
39.80/90	0.012 - **0.024**	7048 - 8240 - **9024**

X-2017, www.findernet.com

Technical data

Insulation according to EN 61810-1				
Nominal voltage of supply system		V AC	230/400	
Rated insulation voltage		V AC	250	400
Pollution degree			3	2
Insulation between coil and contact set				
Type of Insulation			Reinforced	
Overvoltage category			III	
Rated impulse voltage		kV (1.2/50)µs	6	
Dielectric strength		V AC	4000	
Insulation between open contacts (EMR)				
Type of disconnection			Micro-disconnection	
Dielectric strength		V AC/kV (1.2/50)µs	1000/1.5	

Conducted disturbance immunity		$U_N \leq 60$ V	$U_N = 125$ V	$U_N = 230$ V
Fast transients (burst 5/50 ns, 5 kHz) according to EN 61000-4-4 at supply terminals	kV	4	4	4
Voltage pulses (surge 1.2/50 µs) according to EN 61000-4-5 at supply terminals (differential mode)	kV	0.8	2	4

Other data			
Bounce time (EMR): NO/NC		ms	1/6
Vibration resistance (EMR,10…55 Hz): NO/NC		g	10/15
Power lost to the environment	without contact current	W	0.2 (24 V) - 0.4 (230 V)
	with rated current	W	0.6 (24 V) - 0.9 (230 V)

Terminals			
		Screw terminal	**Push-in terminal**
Wire strip length	mm	10	8
Screw torque	Nm	0.5	—
		Solid and stranded cable	**Solid and stranded cable**
Min. wire size	mm^2	1 x 0.5	1 x 0.5
	AWG	1 x 21	1 x 21
Max. wire size	mm^2	1 x 2.5	1 x 2.5
	AWG	1 x 14	1 x 14

Contact specification (EMR)

F 39 - Electrical life (AC) v contact current

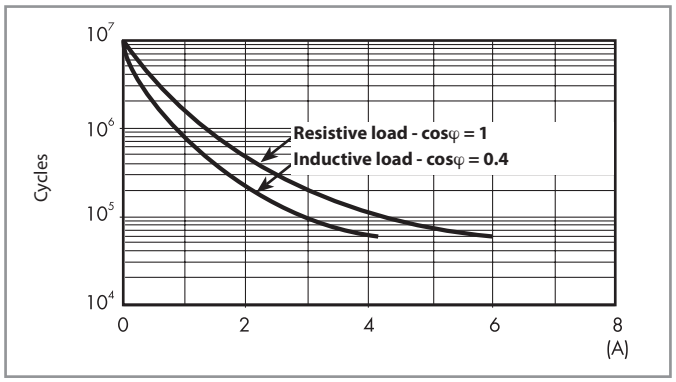

H 39 - Maximum DC1 breaking capacity

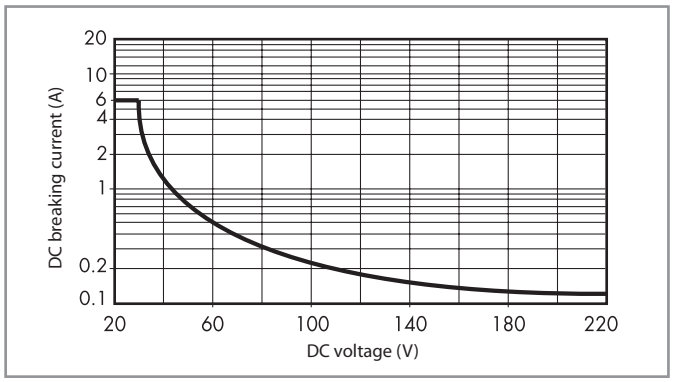

- When switching a resistive load (DC1) having voltage and current values under the curve, an electrical life of ≥ $60 \cdot 10^3$ can be expected.
- In the case of DC13 loads, the connection of a diode in parallel with the load will permit a similar electrical life as for a DC1 load.
  Note: the release time for the load will be increased.

Coil specifications - Electromechnical Relay

Coil data DC, type 39.31/61

Nominal voltage U_N	Coil code	Operating range U_{min}	Operating range U_{max}	Must drop-out voltage U_r	Rated input current at U_N I_N	Rated power at U_N
V		V	V	V	mA	W
125 (110…125)	**7**.125	88	138	12.5	4.6	0.6
220	**7**.220	176	242	22	3.0	0.6

Coil data AC/DC, type 39.11/21/31/41/01/51/61/71

Nominal voltage U_N	Coil code	Operating range U_{min}	Operating range U_{max}	Must drop-out voltage U_r	Rated input current at U_N I_N	Rated power at U_N
V		V	V	V	mA	VA/W
6	**0**.006	4.8	6.6	0.6	35	0.2/0.2
12	**0**.012	9.6	13.2	1.5	15	0.2/0.2
24	**0**.024	19.2	26.4	2.4	11	0.25/0.25
60[1]	**0**.060	48	66	6.0	5.7	0.35/0.35
125 (110…125)	**0**.125	88	138	12.5	5.6	0.7/0.7
240 (24…240)[2]	**0**.240	20.4	264	2.4	19	1.5/0.3

[1] 60 V AC/DC for type 39.31/61 only
[2] 24…240 V AC/DC for type 39.31/61 only

Coil data AC, type 39.11/21/31/41/01/51/61/71

Nominal voltage U_N	Coil code	Operating range U_{min}	Operating range U_{max}	Must drop-out voltage U_r	Rated input current at U_N I_N	Rated power at U_N
V		V	V	V	mA	VA/W
230 (230…240)	**8**.230	184	264	23	4.3	1/0.4

Coil data leakage current suppression versions, type 39.31.3/61.3

Nominal voltage U_N	Coil code	Operating range U_{min}	Operating range U_{max}	Must drop-out voltage U_r	Rated input current at U_N I_N	Rated power at U_N
V		V	V	V	mA	VA/W
125 (110…125)	**3**.125	88	138	44	8.4	1.1/1
230 (230…240)	**3**.230	184	264	72	5.9	1.4/0.5

The 39 Series interface modules (supply version 3) have built-in leakage current suppression to address industry concerns of the contacts not dropping-out when there is residual current in the circuit; at (110…125)V AC/DC and (230…240)V AC.
This problem can occur, for example, when connecting the interface modules to PLC's with triac outputs or when connecting via relatively long cables.

Coil data AC/DC timer, type 39.81/91

Nominal voltage U_N	Coil code	Operating range (AC/DC) U_{min}	Operating range (AC/DC) U_{max}	Must drop-out voltage U_r	Rated input current at U_N DC	Rated input current at U_N AC	Rated power at U_N DC	Rated power at U_N AC
V		V	V	V	mA	mA	W	VA/W
12	**0**.012	9.6	13.2	1.2	15	23	0.2	0.3/0.2
24	**0**.024	19.2	26.4	2.4	11	19	0.25	0.4/0.3

B

Input specifications - Solid State Relay

Input data DC, type 39.10/20/30/40/00/50/60/70

Nominal voltage U_N	Input code	Operating range U_{min}	Operating range U_{max}	Must drop-out voltage U_r	Rated input current at U_N I_N	Rated power at U_N
V		V	V	V	mA	W
6	**7**.006	4.8	6.6	0.6	7.5	0.2
12	**7**.012	9.6	13.2	1.2	20.7	0.25
24	**7**.024	19.2	26.4	2.4	10.5	0.25
60 (1)	**7**.060	38	66	6.0	6.4	0.4
125 (1) (110…125)	**7**.125	88	138	12.5	4.6	0.6
220 (1)	**7**.220	176	242	22	3.0	0.6

(1) 60 V DC, 125 V DC and 220 V DC for type 39.30/60 only

Input data AC/DC, type 39.10/20/30/40/00/50/60/70

Nominal voltage U_N	Input code	Operating range U_{min}	Operating range U_{max}	Must drop-out voltage U_r	Rated input current at U_N I_N	Rated power at U_N
V		V	V	V	mA	VA/W
24 (2)	**0**.024	19.2	26.4	2.4	17.5	0.4/0.3
125 (110…125)	**0**.125	88	138	12.5	5.5	0.7/0.7
240 (24…240)(3)	**0**.240	20.4	264	2.4	17.5	1.5/0.3

(2) 24 V AC/DC for type 39.30/40/60/70 only
(3) 24…240 V AC/DC for type 39.30/60 only

Input data AC, type 39.10/20/30/40/00/50/60/70

Nominal voltage U_N	Input code	Operating range U_{min}	Operating range U_{max}	Must drop-out voltage U_r	Rated input current at U_N I_N	Rated power at U_N
V		V	V	V	mA	VA/W
230 (230…240)	**8**.230	184	264	23	4.2	1/0.4

Input data leakage current suppression versions, type 39.30.3/60.3

Nominal voltage U_N	Input code	Operating range U_{min}	Operating range U_{max}	Must drop-out voltage U_r	Rated input current at U_N I_N	Rated power at U_N
V		V	V	V	mA	VA/W
125 (110…125)	**3**.125	88	138	44	8.4	1.1/1
230 (230…240)	**3**.230	184	264	72	5.9	1.4/0.5

The 39 Series interface modules (supply version 3) have built-in leakage current suppression to address industry concerns of the contacts not dropping-out when there is residual current in the circuit; at (110…125)V AC/DC and (230…240)V AC.
This problem can occur, for example, when connecting the interface modules to PLC's with triac outputs or when connecting via relatively long cables.

Input data AC/DC timer, type 39.80/90

Nominal voltage U_N	Input code	Operating range (AC/DC) U_{min}	Operating range (AC/DC) U_{max}	Must drop-out voltage U_r	Rated input current at U_N DC	Rated input current at U_N AC	Rated power at U_N DC	Rated power at U_N AC
V		V	V	V	mA	mA	W	VA/W
12	**0**.012	9.6	13.2	1.2	15	23	0.2	0.3/0.2
24	**0**.024	19.2	26.4	2.4	11	19	0.25	0.4/0.3

B

Output specification - Solid State Relays

L 34-1 - Output DC current v ambient temperature

39.xx.x.xxx.9024

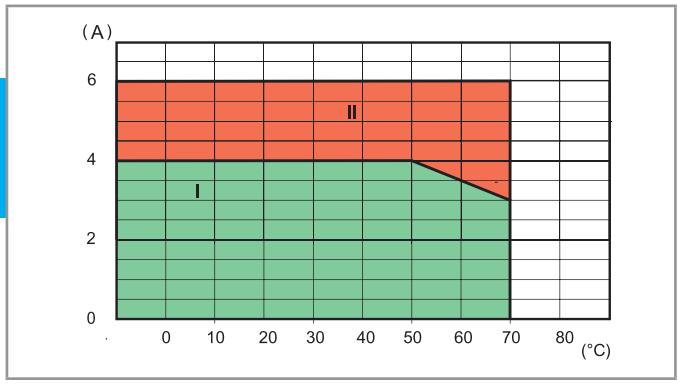

L 34 - Output AC current v ambient temperature

39.xx.x.xxx.8240

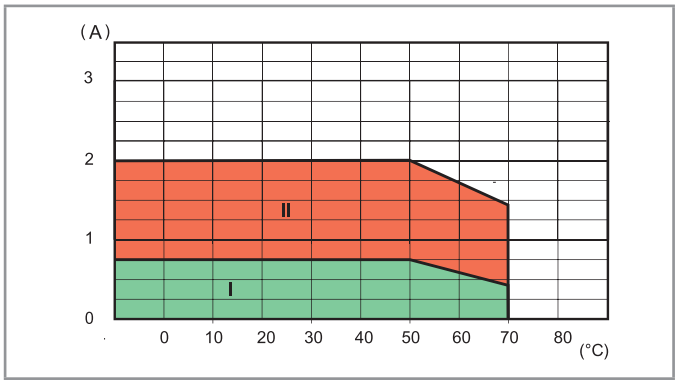

I: SSR installed as a group (without gap between sockets)
II: SSR installed individually in free air , or with a gap ≥ 9 mm, which implies a not significant influence from nearby components

Max recommended switching frequency (Cycles/Hour, with 50% Duty-cycle) at ambient temperature 50°C, single mounting

Load	39.xx.x.xxx.**9024**	39.xx.x.xxx.**8240**	39.xx.x.xxx.**7048**
24 V 6 A DC1	180 000	—	—
24 V 3 A DC L/R = 10 ms	5000	—	—
24 V 2 A DC L/R = 40 ms	3600	—	—
24 V 1 A DC L/R = 40 ms	6500	—	—
24 V 0.8 A DC L/R = 40 ms	9000	—	—
24 V 1.5 A DC L/R = 80 ms	3250	—	—
230 V 2 A AC1	—	60 000	—
230 V 1.25 A AC15	—	3600	—
48 V 0.1 A DC1	—	—	60 000

Timer specifications

EMC specifications			
Type of test		**Reference standard**	
Electrostatic discharge	contact discharge	EN 61000-4-2	4 kV
	air discharge	EN 61000-4-2	8 kV
Radio-frequency electromagnetic field	(80 ÷ 1000 MHz)	EN 61000-4-3	10 V/m
	(1400 ÷ 2700 MHz)	EN 61000-4-3	10 V/m
Fast transients (burst) (5-50 ns, 5 and 100 kHz)	on Supply terminals	EN 61000-4-4	4 kV
	on control signal terminals	EN 61000-4-4	4 kV
Surges (1.2/50 µs) on supply and control signal terminals	common mode	EN 61000-4-5	2 kV
	differential mode	EN 61000-4-5	0.8 kV
Radio-frequency common mode (0.15 ÷ 80 MHz)	on Supply terminals	EN 61000-4-6	10 V
	on control signal terminals	EN 61000-4-6	3 V
Radiated and conducted emission		EN 55022	class B

Other data			
Bounce time (EMR): NO/NC		ms	1/6
Vibration resistance (EMR,10...55 Hz): NO/NC		g	10/15
Power lost to the environment	without contact current	W	0.3
	with rated current	W	0.8

Terminals			
		Screw terminal	**Push-in terminal**
Wire strip length		mm	10	8
Screw torque		Nm	0.5	—
			Solid and stranded cable	**Solid and stranded cable**
Min. wire size		mm^2	1 x 0.5	1 x 0.5
		AWG	1 x 21	1 x 21
Max. wire size		mm^2	1 x 2.5	1 x 2.5
		AWG	1 x 14	1 x 14

Times scales



(0.1…3)s



(3…60)s



(1…20)min



(0.3…6)h

Functions

LED	Supply voltage	NO contact/output
	OFF	Open
	ON	Open
	ON	Open (timing to close in progress)
	ON	Closed

B

Wiring diagram | **U** = Supply voltage | **S** = Signal switch | = Output contact

Without control signal

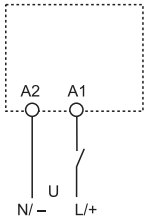

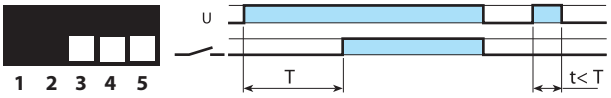

(AI) On-delay
Apply power to timer. Output contacts transfer after preset time has elapsed. Reset occurs when power is removed.

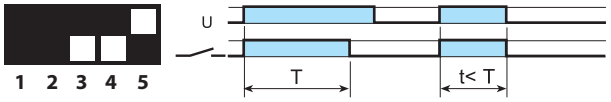

(DI) Interval
Apply power to timer. Output contacts transfer immediately. After the preset time has elapsed, contacts reset.

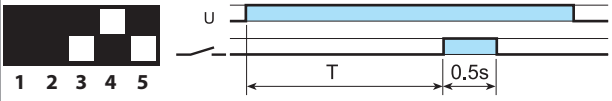

(GI) Pulse (0.5 s) delayed
Apply power to timer. Output contacts transfer after preset time has elapsed. Reset occurs after a fixed time of 0.5 s.

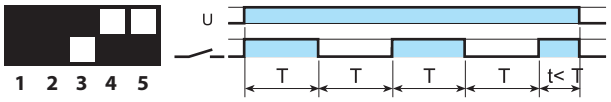

(SW) Symmetrical flasher (starting pulse on)
Apply power to timer. Output contacts transfer immediately and cycle between ON and OFF for as long as power is applied. The ratio is 1:1 (time on = time off).

With control signal

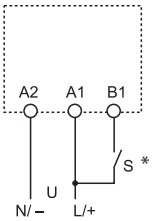

* With DC supply, positive polarity has to be conneted to B1, terminal (according to EN 60204-1).

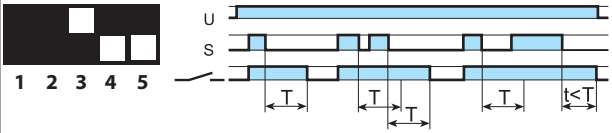

(BE) Off-delay with control signal
Power is permenently applied to the timer. The output contacts transfer immediately on closure of the Signal Switch (S). Opening the Signal Switch initiates the preset delay, after which time the output contacts reset.

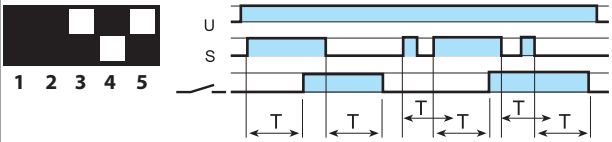

(CE) On- and off-delay with control signal
Power is permenently applied to the timer. Closing the Signal Switch (S) initiates the preset delay, after which time the output contacts transfer. Opening the Signal switch initiates the same preset delay, after which time the output contacts reset.

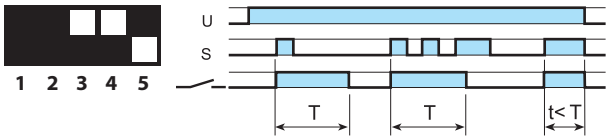

(DE) Interval with control signal on
Power is permenently applied to the timer. On momentary or maintained closure of Signal Switch (S), the output contacts transfer, and remain so for the duration of the preset delay, after which they reset.

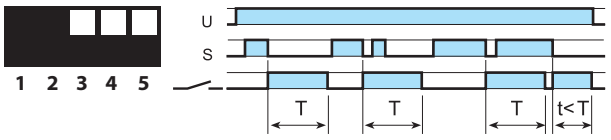

(EE) Interval with control signal off
Power is permenently applied to the timer. On opening of the Signal Switch (S) the output contacts transfer, and remain so for the duration of the preset delay, after which they reset.

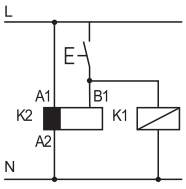

• Possible to control an external load, such as another relay coil or timer, connected to the control signal terminal B1.

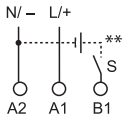

** A voltage other than the supply voltage can be applied to the command Start (B1), example:
A1 - A2 = 24 V AC
B1 - A2 = 12 V DC

X-2017, www.findernet.com

Outline drawings - Screw terminal sockets

39.10/39.20
39.11/39.21
Screw terminal

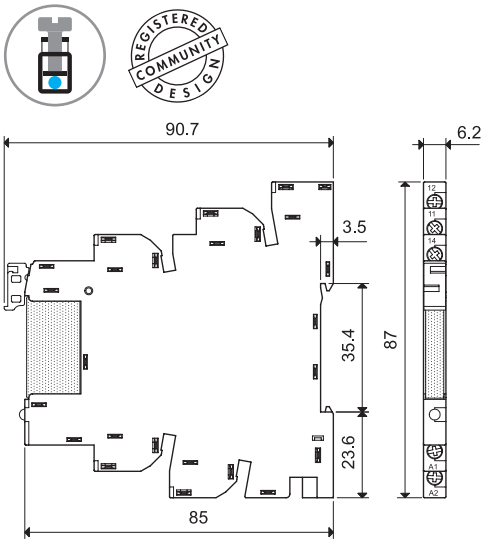

39.30/39.30.3
39.31/39.31.3
Screw terminal

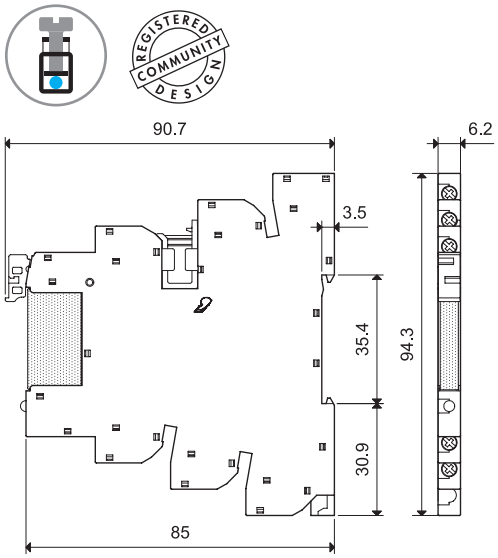

39.40
39.41
Screw terminal

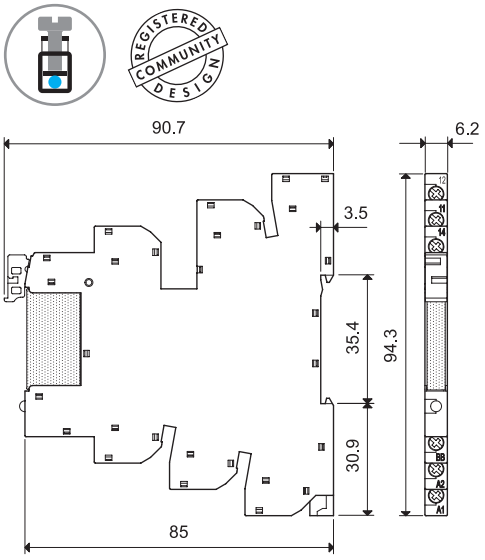

39.80
39.81
Screw terminal

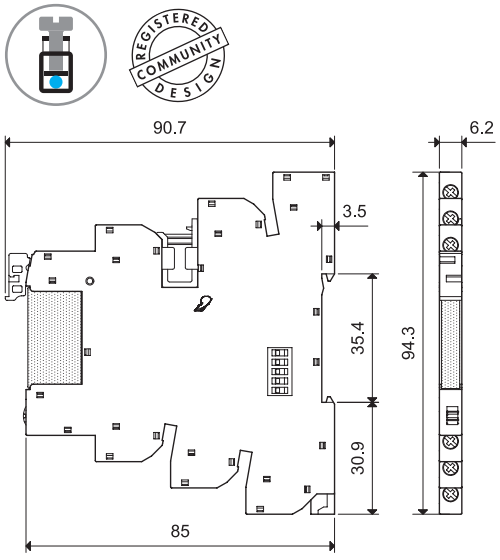

B

Outline drawings - Push-in terminal sockets

39.00/39.01
39.50/39.51
Push-in terminal



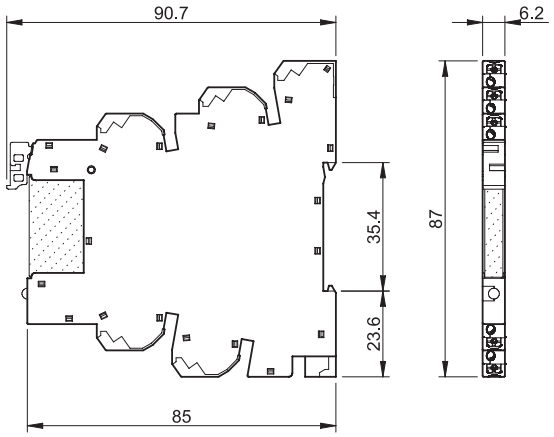

39.60/39.60.3
39.61/39.61.3
Push-in terminal



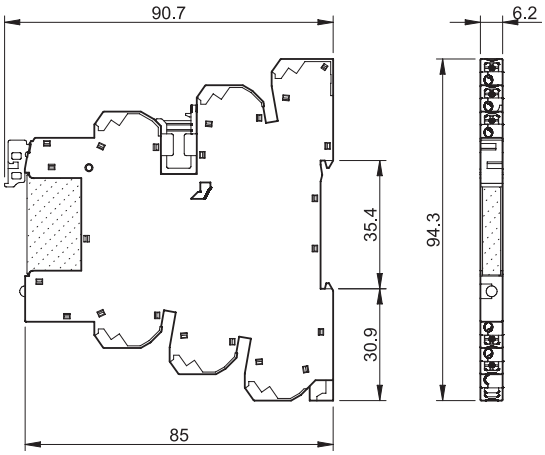

39.70
39.71
Push-in terminal



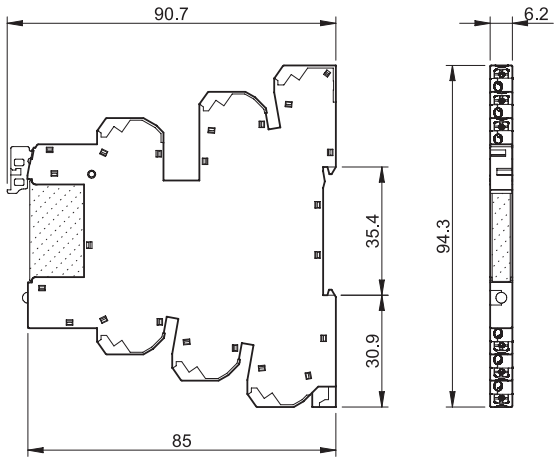

39.90
39.91
Push-in terminal



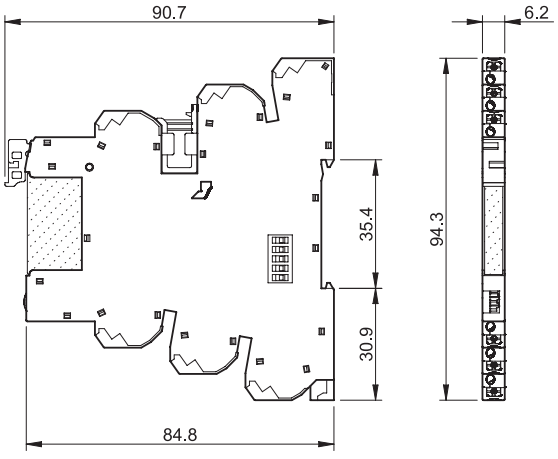

Main features

Push-in terminals

The push-in terminals permit the quick connection of solid wires or ferrules by their simple insertion into the terminal (**A**).
It is possible to open the terminal to extract the wire by first pushing down on the push-button using a screwdriver (**C**).
For stranded cable it is necessary first to open the terminal using the push button, both for the extraction (**C**) and insertion (**B**).
It is possible at any time to check the connection via the test aperture, using a 2 mm diameter test probe (**D**).

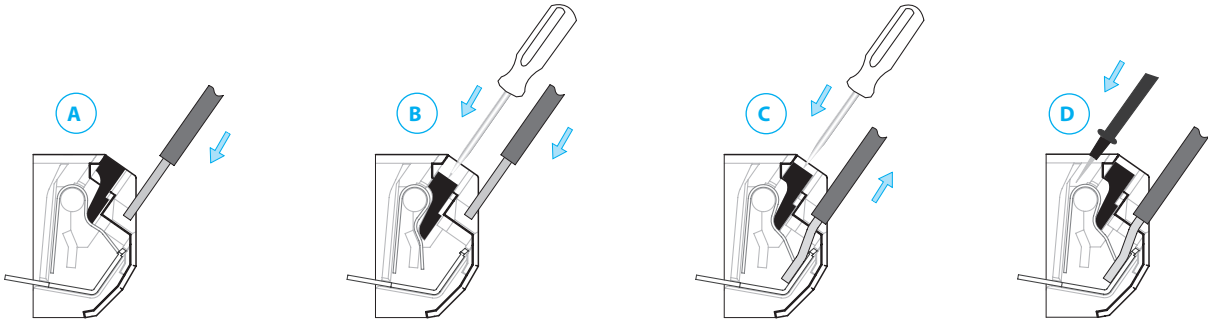

X-2017, www.findernet.com

Electromechanical Relay (1 Pole 6 A) & Screw Socket Combinations

Interface Module Code	Coil voltage	Relay	Socket
*Master**BASIC***			
39.11.0.006.0060	6 V AC/DC	34.51.7.005.0010	93.61.7.024
39.11.0.012.0060	12 V AC/DC	34.51.7.012.0010	93.61.7.024
39.11.0.024.0060	24 V AC/DC	34.51.7.024.0010	93.61.7.024
39.11.0.125.0060	(110…125)V AC/DC	34.51.7.060.0010	93.61.0.125
39.11.8.230.0060	(230…240)V AC	34.51.7.060.0010	93.61.8.230
*Master**PLUS***			
39.31.0.006.0060	6 V AC/DC	34.51.7.005.0010	93.63.7.024
39.31.0.012.0060	12 V AC/DC	34.51.7.012.0010	93.63.7.024
39.31.0.024.0060	24 V AC/DC	34.51.7.024.0010	93.63.7.024
39.31.0.060.0060	60 V AC/DC	34.51.7.060.0010	93.63.7.060
39.31.0.125.0060	(110…125)V AC/DC	34.51.7.060.0010	93.63.0.125
39.31.0.240.0060	(24…240)V AC/DC	34.51.7.024.0010	93.63.0.240
39.31.8.230.0060	(230…240)V AC	34.51.7.060.0010	93.63.8.230
39.31.7.125.0060	(110…125)V DC	34.51.7.060.0010	93.63.7.125
39.31.7.220.0060	220 V DC	34.51.7.060.0010	93.63.7.220
39.31.3.125.0060	(110…125)V AC/DC	34.51.7.060.0010	93.63.3.125
39.31.3.230.0060	(230…240)V AC	34.51.7.060.0010	93.63.3.230
*Master**INPUT***			
39.41.0.006.5060	6 V AC/DC	34.51.7.005.5010	93.64.7.024
39.41.0.012.5060	12 V AC/DC	34.51.7.012.5010	93.64.7.024
39.41.0.024.5060	24 V AC/DC	34.51.7.024.5010	93.64.7.024
39.41.0.125.5060	(110…125)V AC/DC	34.51.7.060.5010	93.64.0.125
39.41.8.230.5060	(230…240)V AC	34.51.7.060.5010	93.64.8.230
*Master**OUTPUT*** 1 NO, 6 A only			
39.21.0.006.0060	6 V AC/DC	34.51.7.005.0010	93.62.7.024
39.21.0.012.0060	12 V AC/DC	34.51.7.012.0010	93.62.7.024
39.21.0.024.0060	24 V AC/DC	34.51.7.024.0010	93.62.7.024
39.21.0.125.0060	(110…125)V AC/DC	34.51.7.060.0010	93.62.0.125
39.21.8.230.0060	(230…240)V AC	34.51.7.060.0010	93.62.8.230
*Master**TIMER***			
39.81.0.012.0060	12 V AC/DC	34.51.7.012.0010	93.68.0.024
39.81.0.024.0060	24 V AC/DC	34.51.7.024.0010	93.68.0.024

Solid State Relay (1 Pole 0.1, 2 or 6 A) & Screw Socket Combinations

Interface Module Code	Input voltage	Relay	Socket
*Master**BASIC***			
39.10.7.006.xxxx	6 V DC	34.81.7.005.xxxx	93.61.7.024
39.10.7.012.xxxx	12 V DC	34.81.7.012.xxxx	93.61.7.024
39.10.7.024.xxxx	24 V DC	34.81.7.024.xxxx	93.61.7.024
39.10.0.125.xxxx	(110…125)V AC/DC	34.81.7.060.xxxx	93.61.0.125
39.10.8.230.xxxx	(230…240)V AC	34.81.7.060.xxxx	93.61.8.230
*Master**PLUS***			
39.30.7.006.xxxx	6 V DC	34.81.7.005.xxxx	93.63.7.024
39.30.7.012.xxxx	12 V DC	34.81.7.012.xxxx	93.63.7.024
39.30.7.024.xxxx	24 V DC	34.81.7.024.xxxx	93.63.7.024
39.30.7.060.xxxx	60 V DC	34.81.7.060.xxxx	93.63.7.060
39.30.7.125.xxxx	(110…125)V DC	34.81.7.060.xxxx	93.63.7.125
39.30.7.220.xxxx	220 V DC	34.81.7.060.xxxx	93.63.7.220
39.30.0.024.xxxx	24 V AC/DC	34.81.7.024.xxxx	93.63.0.024
39.30.0.125.xxxx	(110…125)V AC/DC	34.81.7.060.xxxx	93.63.0.125
39.30.0.240.xxxx	(24…240)V AC/DC	34.81.7.024.xxxx	93.63.0.240
39.30.8.230.xxxx	(230…240)V AC	34.81.7.060.xxxx	93.63.8.230
39.30.3.125.xxxx	(110…125)V AC/DC	34.81.7.060.xxxx	93.63.3.125
39.30.3.230.xxxx	(230…240)V AC	34.81.7.060.xxxx	93.63.3.230
*Master**INPUT***			
39.40.7.006.xxxx	6 V DC	34.81.7.005.xxxx	93.64.7.024
39.40.7.012.xxxx	12 V DC	34.81.7.012.xxxx	93.64.7.024
39.40.7.024.xxxx	24 V DC	34.81.7.024.xxxx	93.64.7.024
39.40.0.024.xxxx	24 V AC/DC	34.81.7.024.xxxx	93.64.0.024
39.40.0.125.xxxx	(110…125)V AC/DC	34.81.7.060.xxxx	93.64.0.125
39.40.8.230.xxxx	(230…240)V AC	34.81.7.060.xxxx	93.64.8.230
*Master**OUTPUT***			
39.20.7.006.xxxx	6 V DC	34.81.7.005.xxxx	93.62.7.024
39.20.7.012.xxxx	12 V DC	34.81.7.012.xxxx	93.62.7.024
39.20.7.024.xxxx	24 V DC	34.81.7.024.xxxx	93.62.7.024
39.20.0.125.xxxx	(110…125)V AC/DC	34.81.7.060.xxxx	93.62.0.125
39.20.8.230.xxxx	(230…240)V AC	34.81.7.060.xxxx	93.62.8.230
*Master**TIMER***			
39.80.0.012.xxxx	12 V AC/DC	34.81.7.012.xxxx	93.68.0.024
39.80.0.024.xxxx	24 V AC/DC	34.81.7.024.xxxx	93.68.0.024

Example: .xxxx
.9024
.7048
.8240

X-2017, www.findernet.com

Electromechanical Relay (1 Pole 6 A) & Push-in Socket Combinations

Interface Module Code	Coil voltage	Relay	Socket
*Master**BASIC***			
39.01.0.006.0060	6 V AC/DC	34.51.7.005.0010	93.60.7.024
39.01.0.012.0060	12 V AC/DC	34.51.7.012.0010	93.60.7.024
39.01.0.024.0060	24 V AC/DC	34.51.7.024.0010	93.60.7.024
39.01.0.125.0060	(110…125)V AC/DC	34.51.7.060.0010	93.60.0.125
39.01.8.230.0060	(230…240)V AC	34.51.7.060.0010	93.60.8.230
*Master**PLUS***			
39.61.0.006.0060	6 V AC/DC	34.51.7.005.0010	93.66.7.024
39.61.0.012.0060	12 V AC/DC	34.51.7.012.0010	93.66.7.024
39.61.0.024.0060	24 V AC/DC	34.51.7.024.0010	93.66.7.024
39.61.0.060.0060	60 V AC/DC	34.51.7.060.0010	93.66.7.060
39.61.0.125.0060	(110…125)V AC/DC	34.51.7.060.0010	93.66.0.125
39.61.0.240.0060	(24…240)V AC/DC	34.51.7.024.0010	93.66.0.240
39.61.8.230.0060	(230…240)V AC	34.51.7.060.0010	93.66.8.230
39.61.7.125.0060	(110…125)V DC	34.51.7.060.0010	93.66.7.125
39.61.7.220.0060	220 V DC	34.51.7.060.0010	93.66.7.220
39.61.3.125.0060	(110…125)V AC/DC	34.51.7.060.0010	93.66.3.125
39.61.3.230.0060	(230…240)V AC	34.51.7.060.0010	93.66.3.230
*Master**INPUT***			
39.71.0.006.5060	6 V AC/DC	34.51.7.005.5010	93.67.7.024
39.71.0.012.5060	12 V AC/DC	34.51.7.012.5010	93.67.7.024
39.71.0.024.5060	24 V AC/DC	34.51.7.024.5010	93.67.7.024
39.71.0.125.5060	(110…125)V AC/DC	34.51.7.060.5010	93.67.0.125
39.71.8.230.5060	(230…240)V AC	34.51.7.060.5010	93.67.8.230
*Master**OUTPUT*** 1 NO, 6 A only			
39.51.0.006.0060	6 V AC/DC	34.51.7.005.0010	93.65.7.024
39.51.0.012.0060	12 V AC/DC	34.51.7.012.0010	93.65.7.024
39.51.0.024.0060	24 V AC/DC	34.51.7.024.0010	93.65.7.024
39.51.0.125.0060	(110…125)V AC/DC	34.51.7.060.0010	93.65.0.125
39.51.8.230.0060	(230…240)V AC	34.51.7.060.0010	93.65.8.230
*Master**TIMER***			
39.91.0.012.0060	12 V AC/DC	34.51.7.012.0010	93.69.0.024
39.91.0.024.0060	24 V AC/DC	34.51.7.024.0010	93.69.0.024

Solid State Relay (1 Pole 0.1, 2 or 6 A) & Push-in Socket Combinations

Interface Module Code	Input voltage	Relay	Socket
*Master**BASIC***			
39.00.7.006.xxxx	6 V DC	34.81.7.005.xxxx	93.60.7.024
39.00.7.012.xxxx	12 V DC	34.81.7.012.xxxx	93.60.7.024
39.00.7.024.xxxx	24 V DC	34.81.7.024.xxxx	93.60.7.024
39.00.0.125.xxxx	(110…125)V AC/DC	34.81.7.060.xxxx	93.60.0.125
39.00.8.230.xxxx	(230…240)V AC	34.81.7.060.xxxx	93.60.8.230
*Master**PLUS***			
39.60.7.006.xxxx	6 V DC	34.81.7.005.xxxx	93.66.7.024
39.60.7.012.xxxx	12 V DC	34.81.7.012.xxxx	93.66.7.024
39.60.7.024.xxxx	24 V DC	34.81.7.024.xxxx	93.66.7.024
39.60.7.060.xxxx	60 V DC	34.81.7.060.xxxx	93.66.7.060
39.60.7.125.xxxx	(110…125)V DC	34.81.7.060.xxxx	93.66.7.125
39.60.7.220.xxxx	220 V DC	34.81.7.060.xxxx	93.66.7.220
39.60.0.024.xxxx	24 V AC/DC	34.81.7.024.xxxx	93.66.0.024
39.60.0.125.xxxx	(110…125)V AC/DC	34.81.7.060.xxxx	93.66.0.125
39.60.0.240.xxxx	(24…240)V AC/DC	34.81.7.024.xxxx	93.66.0.240
39.60.8.230.xxxx	(230…240)V AC	34.81.7.060.xxxx	93.66.8.230
39.60.3.125.xxxx	(110…125)V AC/DC	34.81.7.060.xxxx	93.66.3.125
39.60.3.230.xxxx	(230…240)V AC	34.81.7.060.xxxx	93.66.3.230
*Master**INPUT***			
39.70.7.006.xxxx	6 V DC	34.81.7.005.xxxx	93.67.7.024
39.70.7.012.xxxx	12 V DC	34.81.7.012.xxxx	93.67.7.024
39.70.7.024.xxxx	24 V DC	34.81.7.024.xxxx	93.67.7.024
39.70.0.024.xxxx	24 V AC/DC	34.81.7.024.xxxx	93.67.0.024
39.70.0.125.xxxx	(110…125)V AC/DC	34.81.7.060.xxxx	93.67.0.125
39.70.8.230.xxxx	(230…240)V AC	34.81.7.060.xxxx	93.67.8.230
*Master**OUTPUT***			
39.50.7.006.xxxx	6 V DC	34.81.7.005.xxxx	93.65.7.024
39.50.7.012.xxxx	12 V DC	34.81.7.012.xxxx	93.65.7.024
39.50.7.024.xxxx	24 V DC	34.81.7.024.xxxx	93.65.7.024
39.50.0.125.xxxx	(110…125)V AC/DC	34.81.7.060.xxxx	93.65.0.125
39.50.8.230.xxxx	(230…240)V AC	34.81.7.060.xxxx	93.65.8.230
*Master**TIMER***			
39.90.0.012.xxxx	12 V AC/DC	34.81.7.012.xxxx	93.69.0.024
39.90.0.024.xxxx	24 V AC/DC	34.81.7.024.xxxx	93.69.0.024

Example: .xxxx
.9024
.7048
.8240

X-2017, www.findernet.com

*Master**BASIC*** ATEX version, Screw Socket Combinations

Interface Module Code	Coil voltage	Relay	Socket
*Master**BASIC*** ATEX			
39.11.0.006.0073	6 V AC/DC	34.51.7.005.0000	93.61.0.024.7
39.11.0.012.0073	12 V AC/DC	34.51.7.012.0000	93.61.0.024.7
39.11.0.024.0073	24 V AC/DC	34.51.7.024.0000	93.61.0.024.7
39.11.0.125.0073	(110…125)V AC/DC	34.51.7.060.0000	93.61.0.125.7
39.11.0.240.0073	(24…240)V AC/DC	34.51.7.024.0000	93.61.0.240.7
39.11.8.230.0073	(230…240)V AC	34.51.7.060.0000	93.61.8.230.7
39.11.7.006.0073	6 V DC	34.51.7.005.0000	93.61.7.024.7
39.11.7.012.0073	12 V DC	34.51.7.012.0000	93.61.7.024.7
39.11.7.024.0073	24 V DC	34.51.7.024.0000	93.61.7.024.7

*Master**BASIC*** ATEX version, Push-in Socket Combinations

Interface Module Code	Input voltage	Relay	Socket
*Master**BASIC*** ATEX			
39.01.0.006.0073	6 V AC/DC	34.51.7.005.0000	93.60.0.024.7
39.01.0.012.0073	12 V AC/DC	34.51.7.012.0000	93.60.0.024.7
39.01.0.024.0073	24 V AC/DC	34.51.7.024.0000	93.60.0.024.7
39.01.0.125.0073	(110…125)V AC/DC	34.51.7.060.0000	93.60.0.125.7
39.01.0.240.0073	(24…240)V AC/DC	34.51.7.024.0000	93.60.0.240.7
39.01.8.230.0073	(230…240)V AC	34.51.7.060.0000	93.60.8.230.7
39.01.7.006.0073	6 V DC	34.51.7.005.0000	93.60.7.024.7
39.01.7.012.0073	12 V DC	34.51.7.012.0000	93.60.7.024.7
39.01.7.024.0073	24 V DC	34.51.7.024.0000	93.60.7.024.7

X-2017, www.findernet.com

Accessories



B

093.63
Approvals
(according to type):





093.63.0.024
093.63.8.230

Output fuse module for 39.31/30/81/80/61/60/91/90 types	093.63	093.63.0.024	093.63.8.230

- For 5 x 20 mm fuses up to 6 A, 250 V
- Type 093.63 - Easy visibility of the fuse condition through the window
- Type 093.63.0.024 - (6…24)V AC/DC with LED fuse status indicator
- Type 093.63.8.230 - (110…240)V AC with LED fuse status indicator
- Quick connection to socket

Notes

Safety: Because the output circuit can be reinstated (point 3 below), even with the fuse removed, it is important not to consider the removal of the fuse as a "safety disconnect". Always isolate elsewhere before working on the circuit.
UL: According to UL508A, the fuse module cannot be installed in power circuits (in which it is mandatory that a fuse certified according to UL category JDDZ be fitted). However, where the MasterInterface is connected as an output interface to a PLC no such restrictions apply, and the fuse module can be usefully employed.

Type 093.63

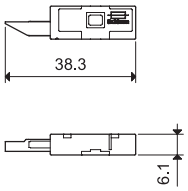

Type 093.63.0.24 / 093.63.8.230

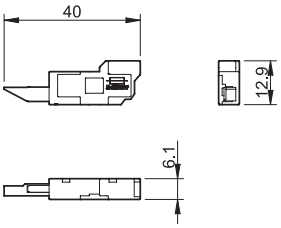









Multi-state fuse module

0. As delivered, the socket comes without a fuse module. However, the absent fuse is internally replaced with an electrical link - which allows the interface relay to be used without a fuse module.
In this state, the peg/indicator is visually hidden and the connection is protected by a special cap.



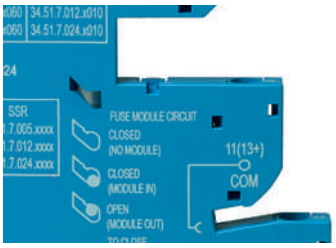

1. With fuse module inserted after removing the cap, the fuse is positioned electrically in series with the common output terminal of the interface module (11 for EMR versions, 13+ for SSR versions, 15 for EMR timer, 15+ for SSR timer).
This state is indicated by the peg/indicator.



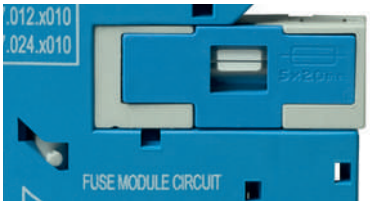

2. If the fuse module is extracted (for example; because the fuse element has blown) the output circuit will be locked open, as this will generally be the "safe option".
This state is indicated by the peg/indicator.



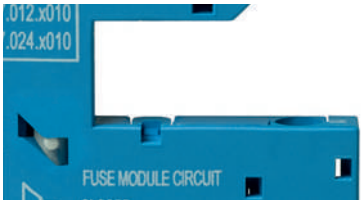

3. In order to reinstate the output circuit it is necessary to either re-insert the fuse module (complete with functional fuse), or alternatively, return the peg/indicator to position **0** by gently applying pressure in the direction of the arrow.





X-2017, www.findernet.com

Accessories



093.16



093.16.0



093.16.1

Approvals (according to type):

16-way jumper link	093.16 (blue)	093.16.0 (black)	093.16.1 (red)
Rated values	6 A - 250 V		
Possibility of multiple connection, side by side			

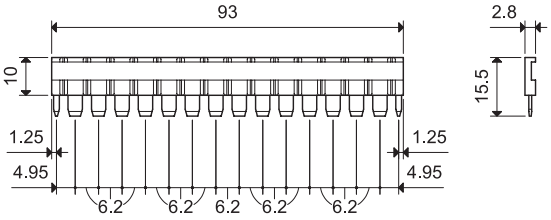



093.60



Dual-purpose plastic separator (1.8 mm or 6.2 mm separation)	093.60

1. By breaking off the protruding ribs (by hand), the separator becomes only 1.8 mm thick; useful for the visual separation of different groups of interfaces, or necessary for the protective separation of different voltages of neighbouring interfaces, or for the protection of cut ends of jumper links.







2. Leaving the ribs in place provides 6.2 mm separation. Simply cutting (with scissors) the relevant segment(s) permits the interconnection across the separator of 2 different groups of interface relays, using the standard jumper link.



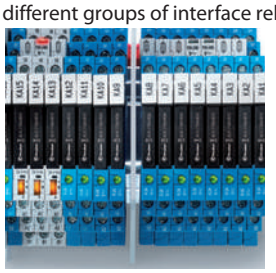

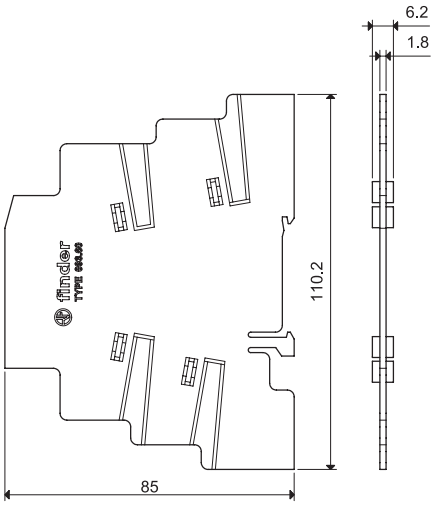

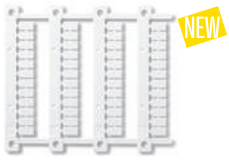

093.48

Sheet of marker tags, plastic, 48 tags, 6 x 10 mm	093.48

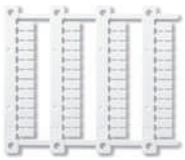

060.48

Sheet of marker tags (CEMBRE Thermal transfer printers) ,48 tags, 6 x 12 mm	060.48

X-2017, www.findernet.com

Accessories



Terminal doubler (for Push-in sockets only)		093.62
Total load		6 A - 300 V
Max. wire size		**Solid and stranded cable**
	mm²	2 x 1.5
	AWG	2 x 16



093.68.14.1

Approvals (according to type):

CE Ex EAC cULus

*Master**ADAPTER***		093.68.14.1
The *Master**ADAPTER*** permits the easy connection of A1/A2 terminals of up to 8 *Master**INTERFACE*** modules to PLC outputs via a 14-Pole ribbon cable, plus simple 2-wire power supply connection ATEX Version.		
Technical data		
Rated current (per signal path)	A	1
Minimum required supply power	W	3
Nominal voltage (U_N)	V DC	24
Operating range		$(0.8…1.1)U_N$
Control logic		Positive switching (to A1)
Power supply status indication		Green LED
Ambient temperature range	°C	–40…+70
Terminals for 24 V control logic		
Type of connector		14 pole, according to IEC 60603-13
ATEX version		II 3G Ex nA IIC Gc
Terminals for 24 V power supply		
Wire strip length	mm	9.5
Screw torque	Nm	0.5
Max. wire size		
solid wire	mm²	1 x 4 / 2 x 1.5
	AWG	1 x 12 / 2 x 16
stranded wire	mm²	1 x 2.5 / 2 x 1.5
	AWG	1 x 14 / 2 x 16



Connected *MasterADAPTER*

Wiring diagram

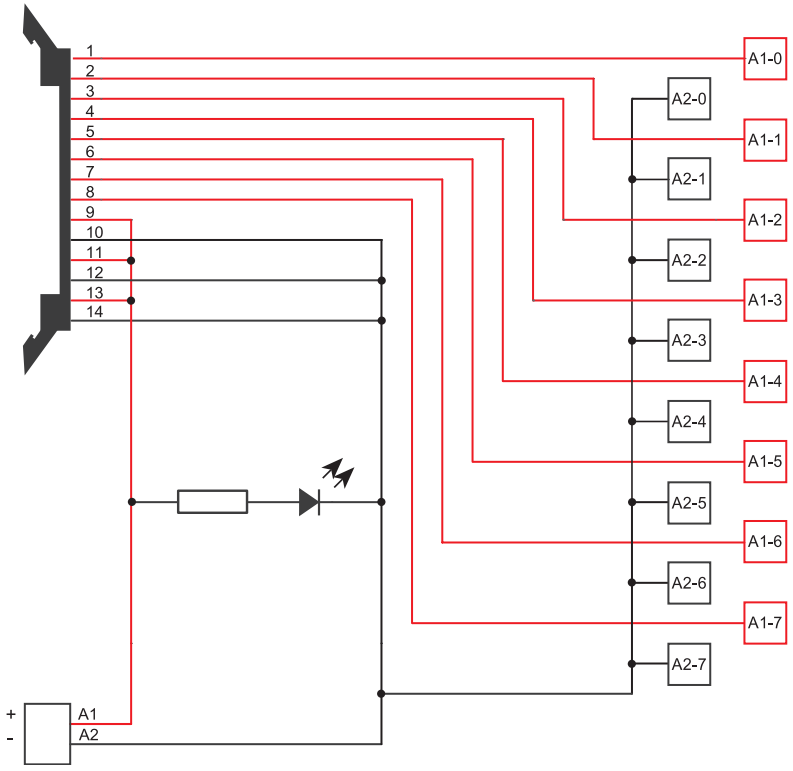

Please see general technical information

X-2017, www.findernet.com