Profile cylinder ISO 15552, PRA series

R412014308

AVENTICS Series PRA Profile cylinders (ISO 15552)

The AVENTICS Series PRA (ISO 15552) cylinders have a compact design profile with integrated sensor slots. The Series PRA (ISO 15552) cylinders can be used for all industries. This includes general automation technology, machine and systems construction, as well as specific industry applications.



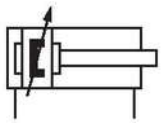

Technical data

Industry	Industrial
Standards	ISO 15552
Piston Ø	80 mm
Stroke	125 mm
Ports	G 3/8
Functional principle	Double-acting
Cushioning	Pneumatic adjustable cushioning
Magnetic piston	Piston with magnet
Environmental requirements	Industry standard Heat resistant
Piston rod thread - type	External thread
Piston rod thread	M20x1,5
Piston rod	single
Scraper	Heat-Resistant Scraper
Pressure for determining piston forces	6,3 bar
Retracting piston force	2855 N
Extracting piston force	3165 N
Min. ambient temperature	-10 °C
Max. ambient temperature	120 °C
Min. working pressure	2 bar

Max. working pressure	10 bar
Cushioning length	19.5 mm
Cushioning energy	54 J
Weight 0 mm stroke	2.37 kg
Weight +10 mm stroke	0.085 kg
Stroke max.	2800 mm
Medium	Compressed air
Min. medium temperature	-10 °C
Max. medium temperature	120 °C
Max. particle size	50 µm
Min. oil content of compressed air	0 mg/m³
Max. oil content of compressed air	5 mg/m³

Material

Piston rod	Stainless Steel
Scraper material	Fluorocaoutchouc
Seal material	Fluorocaoutchouc
Material, front cover	Die-cast aluminum
Cylinder tube	Aluminum
End cover	Die-cast aluminum
Nut for piston rod	Steel, chrome-plated
Part No.	R412014308

Technical information

The pressure dew point must be at least 15 °C less than ambient and medium temperature and may not exceed 3 °C.

The oil content of compressed air must remain constant during the life cycle.

Use only the approved oils from AVENTICS. Further information can be found in the “Technical information” document (available in https://www.emerson.com/en-us/support).

Profile cylinder ISO 15552, PRA series

R412014308

Dimensions

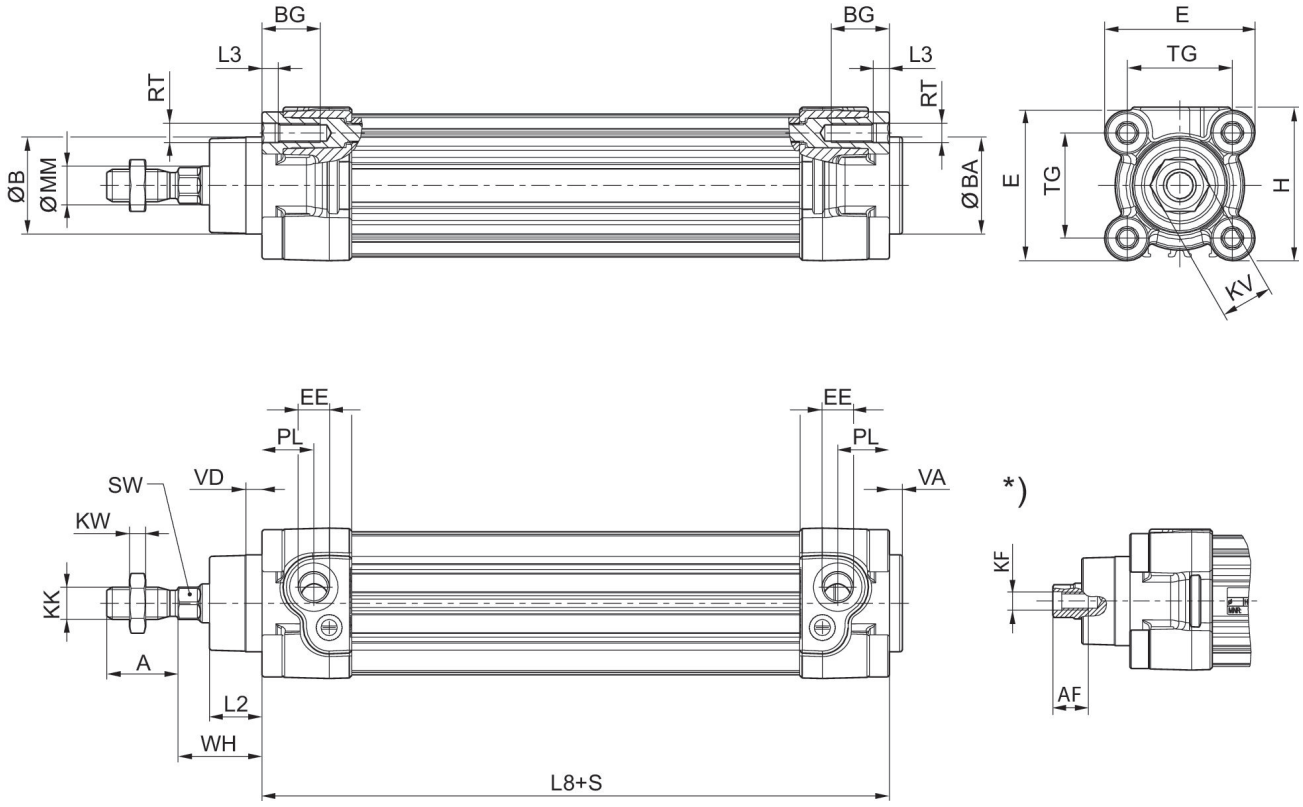

S = stroke
* Internal thread

Piston Ø	A -2	AF+1	ØB d11	ØBA d11	BG min.	E	EE	G	H
32	22	12	30	30	16	46.5	G 1/8	27.75	47.5
40	24	13.5	35	35	16	53	G 1/4	33.25	53
50	32	17	40	40	16	65	G 1/4	31	65
63	32	17	45	45	16	75	G 3/8	38.25	75
80	40	21	45	45	17	95	G 3/8	38.25	95
100	40	21	55	55	17	115	G 1/2	42.25	115
125	54	28	60	60	20	140	G 1/2	53.85	140

Piston Ø	KF	KK	KV	KW	ØMM f8	PL	L2	L3 ±0,5	L8
32	M6	M10x1,25	16	5	12	16	16.25	4.5	94±0,4
40	M8	M12x1,25	18	6	16	20	18.25	4.5	105±0,7
50	M10	M16x1,5	24	8	20	19	25	4.5	106±0,7
63	M10	M16x1,5	24	8	20	24	25	4.5	121±0,8
80	M12	M20x1,5	30	10	25	23.5	33	0	128±0,8
100	M12	M20x1,5	30	10	25	25	36	0	138±1
125	M16	M27x2	41	13.5	32	33	45	0	160±1

Piston Ø	RT	SW	TG	VA -1	VD	WH
32	M6	10	32,5±0,5	4	5	26±1,4

Profile cylinder ISO 15552, PRA series

R412014308

Piston Ø	RT	SW	TG	VA -1	VD	WH
40	M6	13	38±0,5	4	5	30±1,4
50	M8	17	46,5±0,6	4	5	37±1,4
63	M8	17	56,5±0,7	4	5	37±1,8
80	M10	22	72±0,7	4	5	46±1,8
100	M10	22	89±0,7	4	5	51±1,8
125	M12	27	110±1,1	6	7	65±2,2

Cushioning diagram

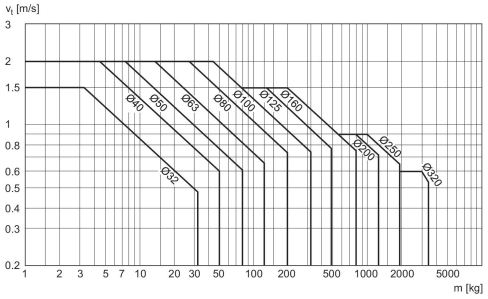

v_t = Piston velocity [m/s] m = Cushionable mass [kg]

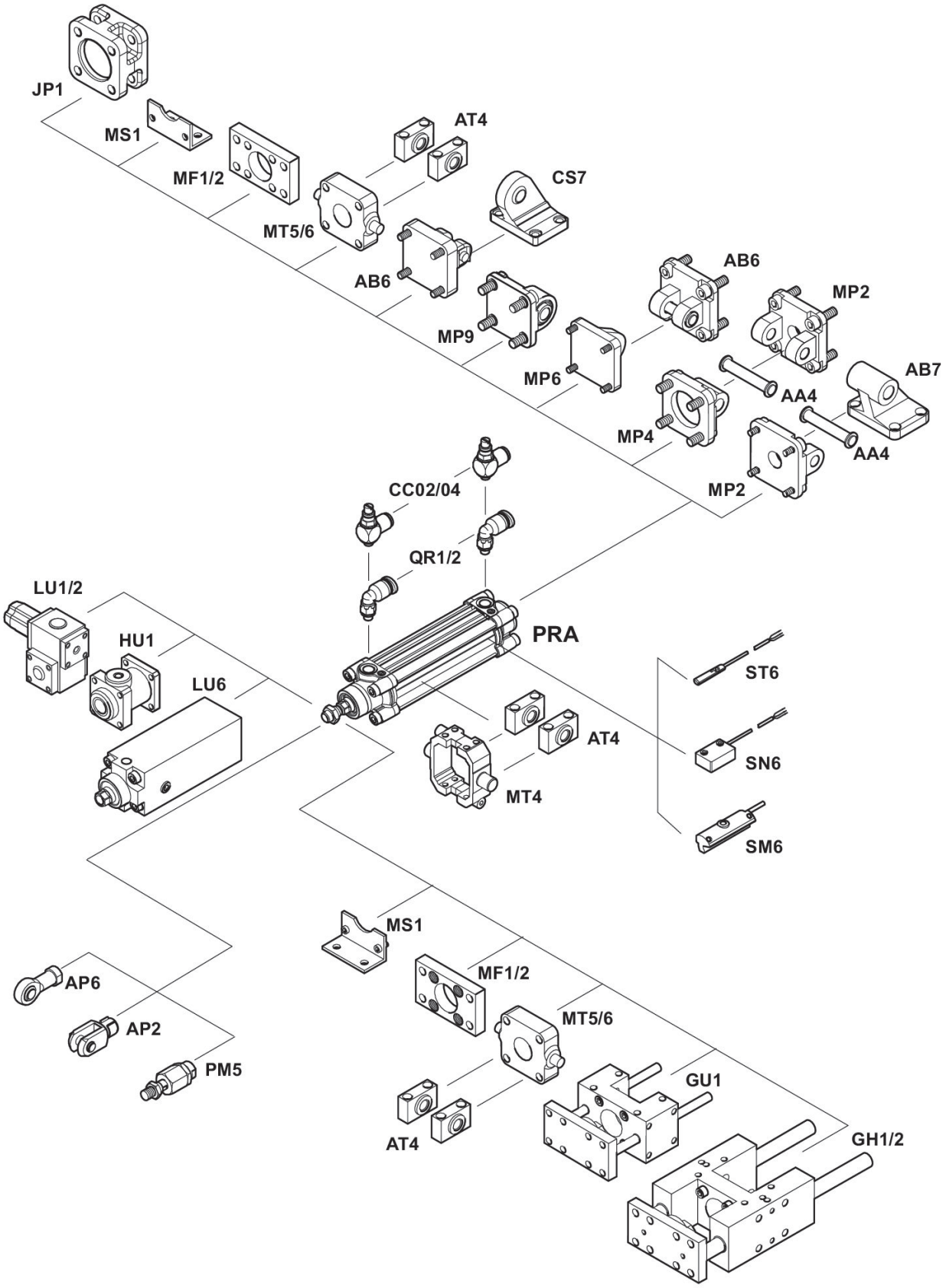
JP1
MS1
MF1/2
MT5/6
AT4
CS7
AB6
MP9
MP6
AB6
MP2
AB7
AA4
MP4
AA4
MP2
CC02/04
QR1/2
LU1/2
HU1
LU6
PRA
ST6
SN6
SM6
AT4
MT4
MS1
MF1/2
MT5/6
GU1
GH1/2
AT4
AP6
AP2
PM5