# LUMOTAST 75 IP40, illuminated pushbutton, square collar, flat bezel, momentary contact function, 1 NC + 1 NO



### fields of application

- Measurement-control-regulation
- Mechanical and system engineering
- Signalling systems

### special features

- Mounting hole diameter 16.2 mm
- 3 collar shapes – also rectangular
- 20 different actuating and indicator elements
- Keylock switch with 2 switching positions in compatible design – round and rectangular
- Lamp socket: T4.5: full-surface illumination with LED is possible
- Silver contacts with self-cleaning snap-action contact bridge for safe switching, suitable for large currents (max. 250 V / 4 A)
- Water splash protection class IP 40 on front
- available contact configurations: 1 NC +1 NO or 2 NC + 2 NO
- Solder terminal

## description

LUMOTAST 75 illuminated pushbuttons and signal lamps have been in use for decades. They are the most successful mono-switches in RAFI history. The wide range of collar shapes in classic design and the established terminal and legending concept make the LUMOTAST 75 series one of your most reliable components. Keylock switches compatible with the design are also available. The basic LUMOTAST 75 model complies with IP 40 protection class according to DIN.
Lens covers and diffusing discs must be ordered separately.

## technical data

**general**

| | |
|---|---|
| Collar color | black |
| Collar shape | square |
| Operating temperature, min. | -25 °C |
| Operating temperature, max. | 55 °C |
| Storage temperature, min. | -40 °C |
| Storage temperature, max. | 80 °C |
| illuminated | Yes |
| Lamp socket | T4.5 |
| Packaging | Box |
| Packaging unit | 10 pcs. |

### direct links

- RAFI eCatalog

The information in this data sheet only contains general descriptions and / or performance features, which may not apply precisely as described to the respective application, and which my change due to further product enhancements. The technical data, illustrations and other information about our products are the mere results of individual technical testing. These descriptions and other product features are only binding if they expressly agreed upon at the time of the conclusion of a binding contract. In all other cases, we reserve the right to make technical changes as well as changes of availability. Pictures and other graphic illustrations are approximations only. All product names may be trademarks or brand names of the RAFI Group or any other sub-supplier of RAFI. The use of such by any third parties for their own purposes may infringe the rights of the respective entity holding those rights.


**RAFI GmbH & Co. KG**

Ravensburger Str. 128-134
88276 Berg / Ravensburg
Germany
www.rafi-group.com,
info.headquarters@rafi-group.com

| | |
|---|---|
| net weight | 11 g |
| Operating life electrical | 200,000 (2A / 250V AC) cycles<br>60.000 (4A / 250V AC) cycles |
| B10 | 260,000 cycles |
| Degree of protection, front side, according to DIN EN 60529 | IP40 |
| Protection class | II |
| MOQ order | 20 pcs. |
| RoHS compliant | Yes |
| REACH compliant | Yes |

**mounting diameters**

| | |
|---|---|
| Outside dimension, length | 18 mm |
| Outside dimension, width | 18 mm |
| Outside dimension, height | 49 mm |
| Mounting hole | 16.2 mm |
| Mounting depth | 41.5 mm |
| Installation height | 7.5 mm |

**mechanical data**

| | |
|---|---|
| Actuation function | momentary contact function |
| Operating force, max. | 6.5 N |
| Operating force, min. | 3 N |
| Operating travel, max. | 2.7 mm |
| Contact function | 1 NC + 1 NO |
| Contact system | Bridge-snap-action contact |
| Contact material | Silver |
| Fixing | Threaded ring |
| Solderability | Yes |
| Terminal on the rear | Solder terminal |

**electrical data**

| | |
|---|---|
| Rated voltage, min. | 12 V |
| Rated voltage, max. | 230 V |
| Rated current, min. | 0.05 A |
| Rated current, max. | 4 A |

The information in this data sheet only contains general descriptions and / or performance features, which may not apply precisely as described to the respective application, and which my change due to further product enhancements. The technical data, illustrations and other information about our products are the mere results of individual technical testing. These descriptions and other product features are only binding if they expressly agreed upon at the time of the conclusion of a binding contract. In all other cases, we reserve the right to make technical changes as well as changes of availability. Pictures and other graphic illustrations are approximations only. All product names may be trademarks or brand names of the RAFI Group or any other sub-supplier of RAFI. The use of such by any third parties for their own purposes may infringe the rights of the respective entity holding those rights.


**RAFI GmbH & Co. KG**

Ravensburger Str. 128-134
88276 Berg / Ravensburg
Germany
www.rafi-group.com,
info.headquarters@rafi-group.com

## drawings

### Dimensioned drawing

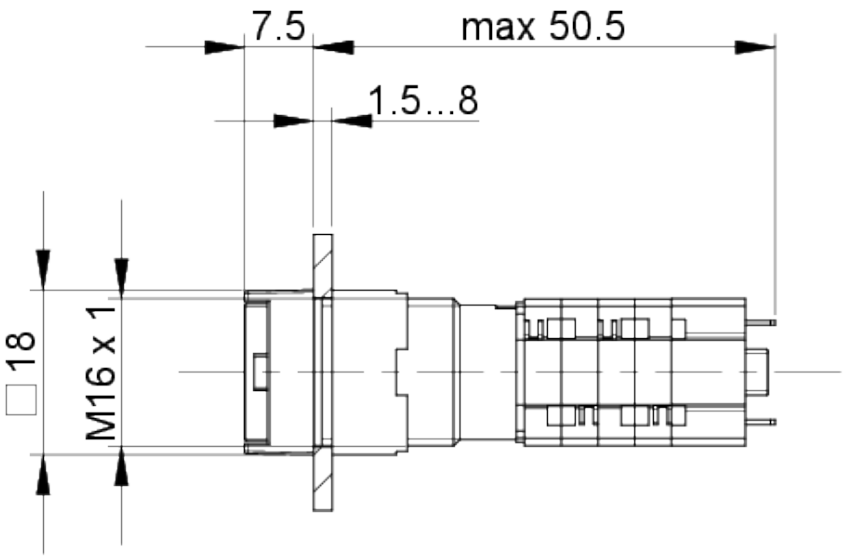


### Mounting hole drawing

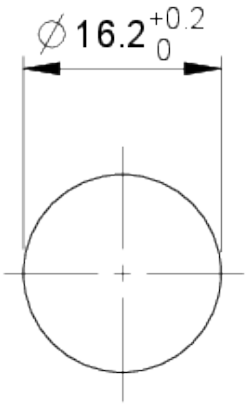


The information in this data sheet only contains general descriptions and / or performance features, which may not apply precisely as described to the respective application, and which my change due to further product enhancements. The technical data, illustrations and other information about our products are the mere results of individual technical testing. These descriptions and other product features are only binding if they expressly agreed upon at the time of the conclusion of a binding contract. In all other cases, we reserve the right to make technical changes as well as changes of availability. Pictures and other graphic illustrations are approximations only. All product names may be trademarks or brand names of the RAFI Group or any other sub-supplier of RAFI. The use of such by any third parties for their own purposes may infringe the rights of the respective entity holding those rights.


**RAFI GmbH & Co. KG**

Ravensburger Str. 128-134
88276 Berg / Ravensburg
Germany
www.rafi-group.com,
info.headquarters@rafi-group.com