OA5102

Through-beam sensor receiver

OAE-FCKG

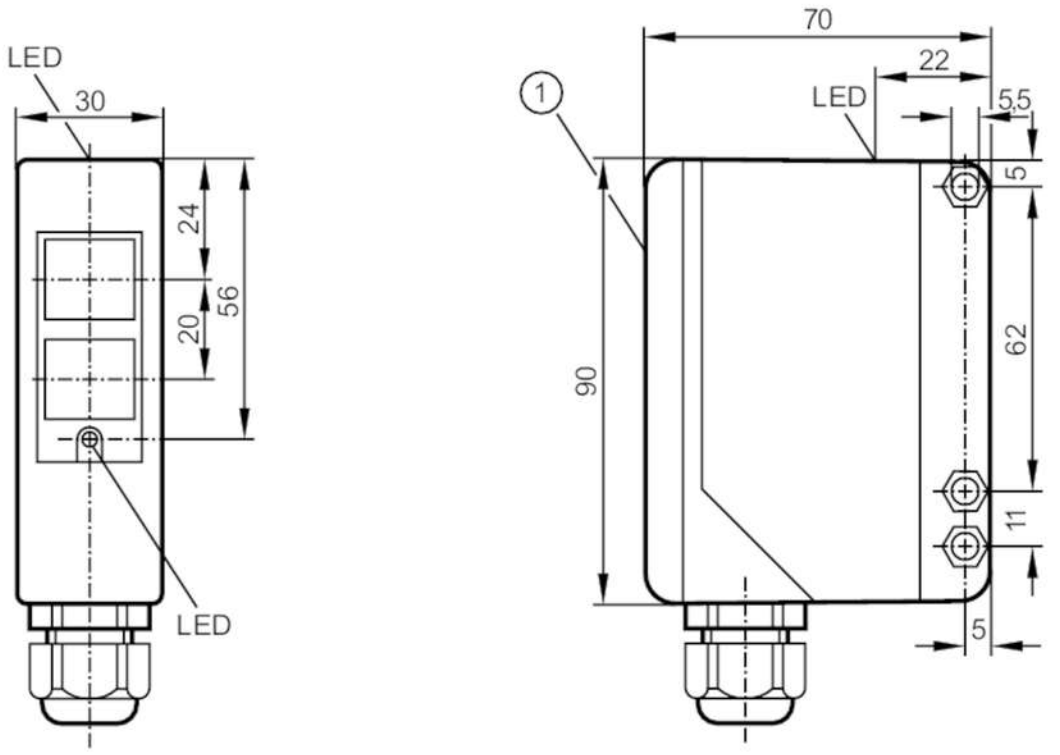

1 selection switch and potentiometer under cover
receiver in upper lens

Product characteristics		
Type of light		infrared light
Housing		rectangular
Application		
Special feature		Function check output
Function principle		Through-beam sensor
Electrical data		
Operating voltage	[V]	10...36 DC
Current consumption	[mA]	< 50
Protection class		II
Reverse polarity protection		yes
Type of light		infrared light
Wave length	[nm]	880
Outputs		
Electrical design		PNP/NPN
Output function		light-on/dark-on mode; (programmable)
Function check output		yes
Max. current load for function check output	[mA]	10

OA5102

Through-beam sensor receiver

OAE-FCKG

Permanent current rating of switching output DC	[mA]	250	
Max. current load in dual output mode	[mA]	100	
Switching frequency DC	[Hz]	300	
Short-circuit protection		yes	
Type of short-circuit protection		pulsed	
Overload protection		yes	
Detection zone			
Transmitter / receiver		receiver	
Range	[m]	< 50	
Range adjustable		yes	
Operating conditions			
Ambient temperature	[°C]	-25...60	
Protection		IP 65	
Tests / approvals			
EMC		EN 60947-5-2	
		EN 55011	class B
MTTF	[years]	399	
Mechanical data			
Weight	[g]	281	
Housing		rectangular	
Dimensions	[mm]	90 x 30 x 70	
Materials		PPO modified	
Lens material		PMMA	
Lens alignment		side lens	
Displays / operating elements			
Display		switching status	1 x LED, yellow
		operation	1 x LED, green
		function	1 x LED, red
Accessories			
Items supplied		Angle bracket: 1, E20514	
		screwdrivers	
Remarks			
Pack quantity		1 pcs.	

OA5102

Through-beam sensor receiver

OAE-FCKG

Electrical connection

terminals: ...1.5 mm²; Cable sheath: Ø 4.5...10 mm; Cable gland: M16 X 1.5

Connection

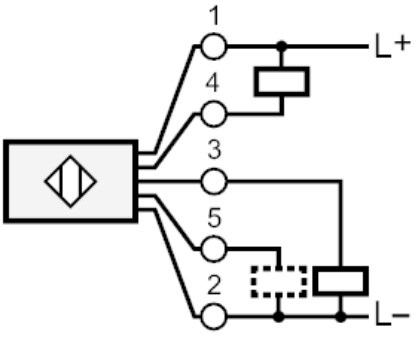

5	Function check output

Diagrams and graphs

excess gain graph

