GZT80

For RM84, RM85,
RM85 inrush,
RM85 105 °C sensitive,
RM87L, RM87L sensitive,
RM87P, RM87P sensitive

Screw terminals
Max. tightening moment
for the terminal: 0,7 Nm
35 mm rail mount
acc. to PN-EN 60715
or on panel mounting
80 x 15,6 x 61(67) mm ❷
Two poles, 5 mm pinout
12 A, 300 V AC



Connection diagrams ❸

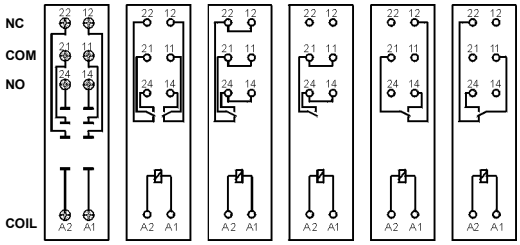

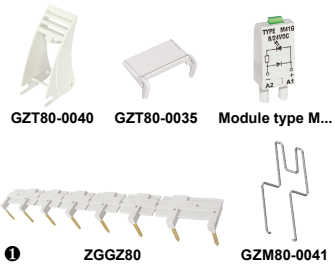

Accessories ❶

Dimensions

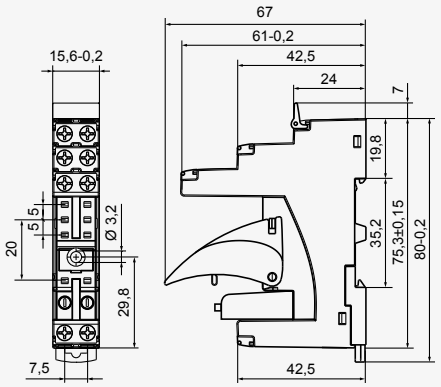

GZM80

For RM84, RM85,
RM85 inrush,
RM85 105 °C sensitive,
RM87L, RM87L sensitive,
RM87P, RM87P sensitive

Screw terminals
Max. tightening moment
for the terminal: 0,7 Nm
35 mm rail mount
acc. to PN-EN 60715
or on panel mounting
81,6 x 15,9 x 61(67) mm ❷
Two poles, 5 mm pinout
12 A, 300 V AC

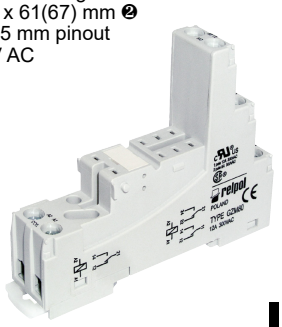

Connection diagrams ❸

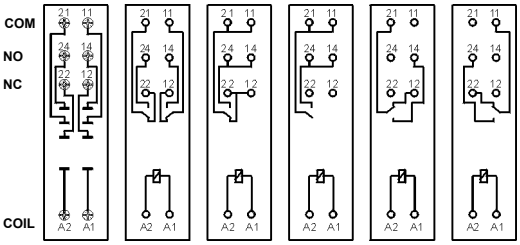

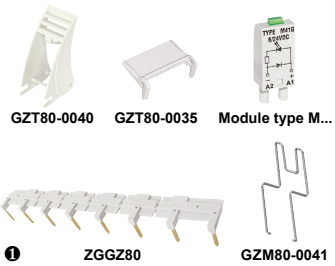

Accessories ❶

Dimensions

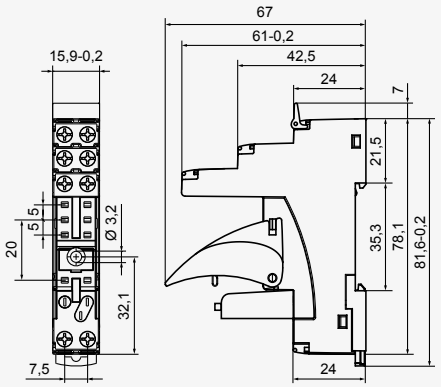

GZS80

For RM84, RM85,
RM85 inrush,
RM85 105 °C sensitive,
RM87L, RM87L sensitive,
RM87P, RM87P sensitive

Screw terminals
Max. tightening moment
for the terminal: 0,5 Nm
35 mm rail mount
acc. to PN-EN 60715
or on panel mounting
76,8 x 15,8 x 42,5(57,1) mm ❷
Two poles, 5 mm pinout
10 A, 300 V AC



Connection diagrams ❸

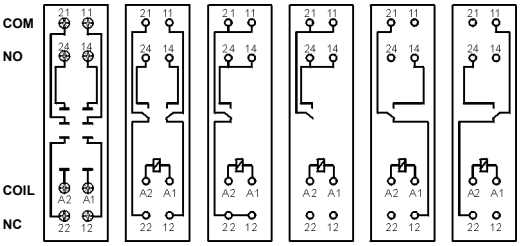

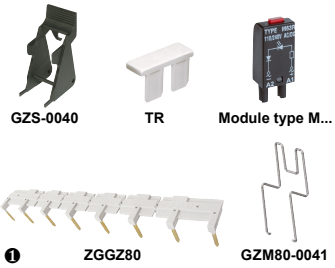

Accessories ❶

Dimensions

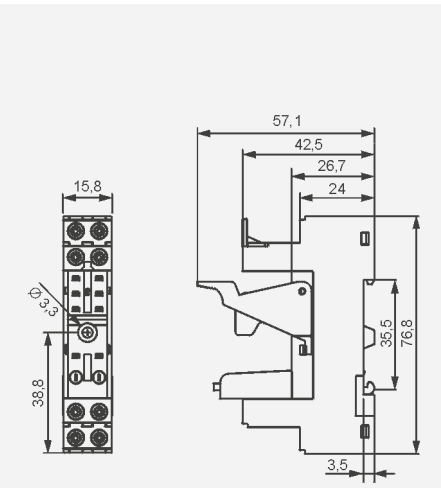

❶ Mounting and sub-assemblies of accessories in the socket - see page 16. Signalling / protecting modules type M... - see page 17. ❷ In the bracket the height of socket with retainer / retractor clip is shown. ❸ For RM85..., RMP85: loads above 12 A (GZT80, GZM80) or 10 A (GZS80, GZF80, GZMB80) require bridging pairs of terminals: 11 with 21, 12 with 22, 14 with 24 - see catalog "Relays" and www.relpol.com.pl