Precision pressure regulator, Series PR2-RGP

R412010840

AVENTICS Series PR2 Precision pressure regulators

The AVENTICS Series PR1/PR2 is designed for applications that demand fast responses to the slightest fluctuation in compressed air. They can be adjusted precisely and are an alternative to electronic pressure regulators. Precision pressure regulators are used to achieve extremely accurate pressure control independent from the pilot pressure and the flow rate. They offer high performance and flexibility, combined with increased reliability.



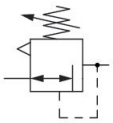

Technical data

Industry	Industrial
Function	Precision pressure regulator
Parts	Precision pressure regulator
Mounting orientation	Any
Regulator type	Diaphragm-type pressure regulator
Port	G 1/4
Nominal flow Qn	2000 l/min
Min. regulation range	0.05 bar
Max. regulation range	8 bar
Min. working pressure	0.5 bar
Max. working pressure	16 bar
Min. ambient temperature	0 °C
Max. ambient temperature	60 °C
Activation	Mechanical
Regulator function	with relieving air exhaust
Pressure supply	single
Max. internal air consumption q_v	1.5 l/min
Medium	Compressed air
Recommended pre-filtering	5 µm

Weight	0.24 kg

Material

Housing material	Aluminum
Seal material	Acrylonitrile butadiene rubber
Part No.	R412010840

Technical information

The pressure dew point must be at least 15 °C less than ambient and medium temperature and may not exceed 3 °C.

Relieving exhaust: > 300 l/min at 6 bar

Precision: < 0.005 bar

Internal air consumption at P1 = 8 bar (collected). Exhaust and internal air consumption via G 1/4 connection possible downward.

Mounting with mounting bracket 1821331013 (please order separately) and panel nuts

Notice: This product may only be operated with oil-free, dry compressed air.

Nominal flow Qn with secondary pressure p2 = 6,3 bar at Δp = 1 bar

Precision pressure regulator, Series PR2-RGP

R412010840

Dimensions

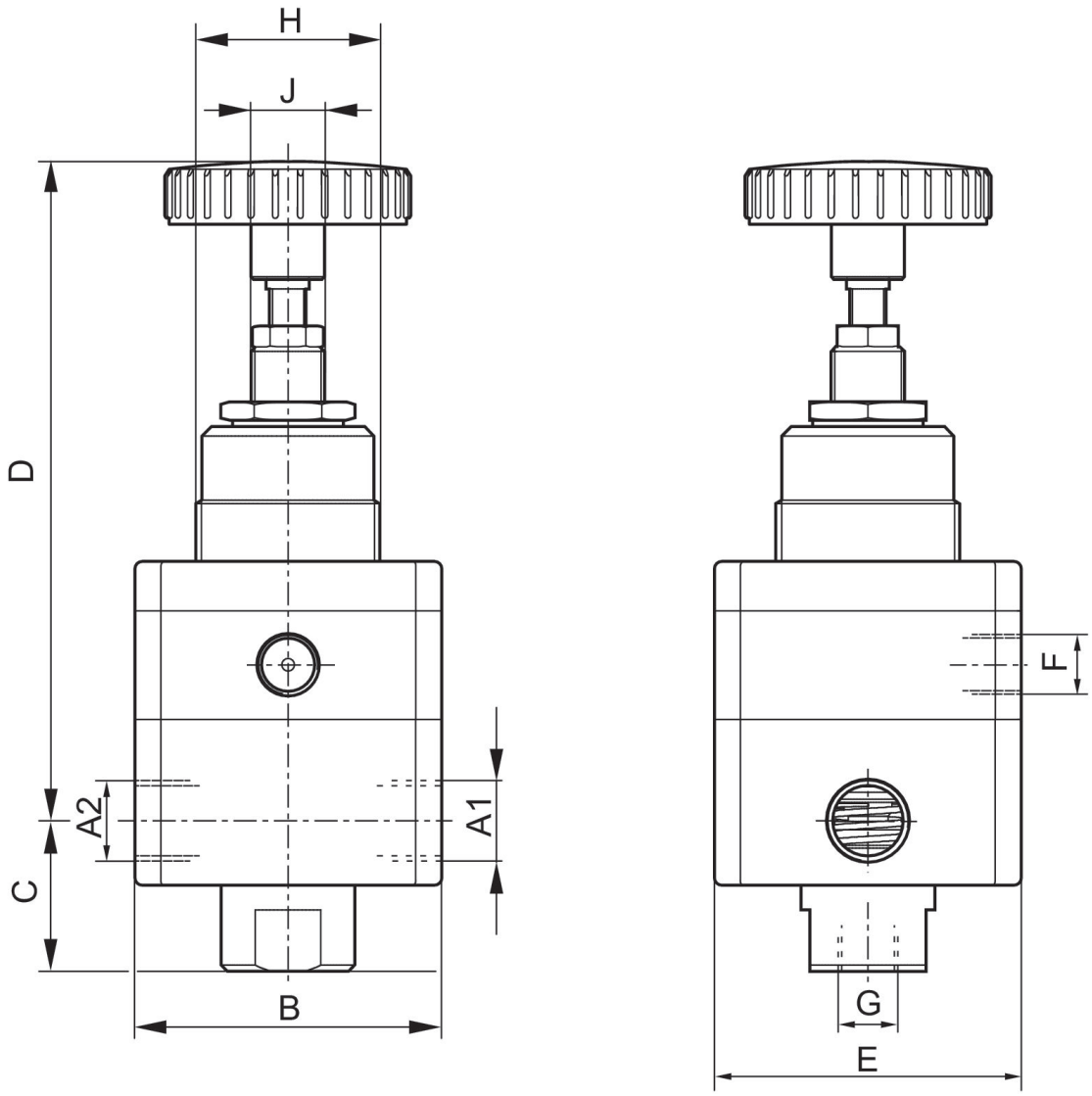

A1 = input
A2 = output
Unscrew handwheel including spindle completely.
Mount precision pressure regulator using mounting bracket and panel nut.
Screw handwheel including spindle back in fully, adjust desired pressure, and fix spindle with lock nut.

Dimensions in mm

Part No.	A1	A2	B	C	D	E	F	G	H
R412010840	G 1/4	G 1/4	50	25	106	50	G 1/8	G 1/8	M30x1,5

Part No.	J
R412010840	M12x1

Exhaust characteristics

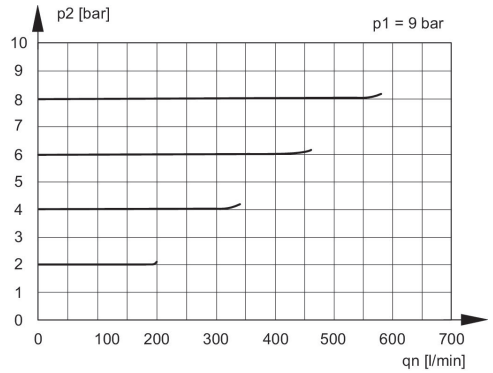

p1 = Working pressure
p2 = Secondary pressure
qn = Nominal flow

Flow rate characteristic, p2 = 0,05 - 7 bar

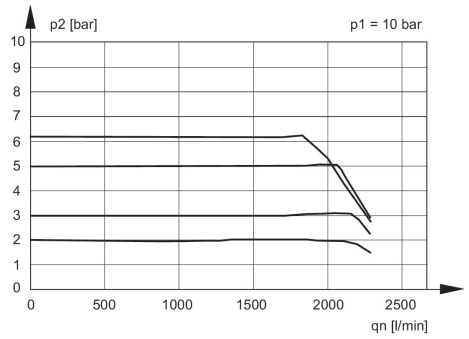

p1 = Working pressure
p2 = Secondary pressure
qn = Nominal flow

Pressure characteristics curve

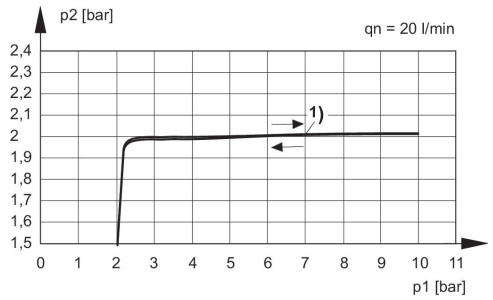

p1 = Working pressure
p2 = Secondary pressure
qn = Nominal flow
1) Starting point

Flow rate characteristic, p2 = 0,05 - 7 bar

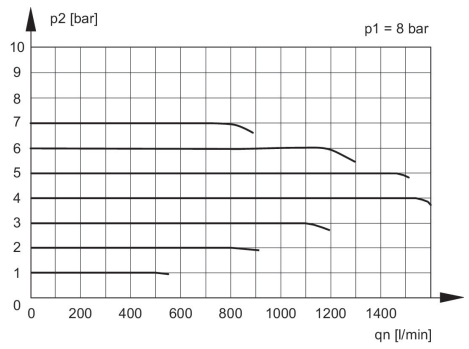

p1 = Working pressure
p2 = Secondary pressure
qn = Nominal flow