SYN 269 h | Article number: 2690008

Description



- Analogue time switch with daily or weekly program (switching disc can be turned)
- 1 channel
- Without power reserve
- Synchronised with mains
- Switching preselection
- Permanent ON/OFF switch
- Simple summer/winter time correction
  - Time can be changed clockwise or anti-clockwise
- 32 tappets included in delivery
- Tappets
- Shortest switching time: 20 minutes or 2 hours
- Clock hands for time display
- Switching status display

Technical data

Operating voltage	230 V AC
Frequency	50 Hz
Number of channels	1
Installation type	Front panel installation/wall installation
Type of connection	Screw terminals
Drive	Synchronous motor
Program	Daily program, Weekly program
Switching capacity at 250 V AC, cos φ = 1	10 A
Switching capacity at 250 V AC, cos φ = 0,6	2 A
Shortest switching times	20 min, 2 h
Programmable every	5 min, 30 min
Time accuracy at 25 °C	Synchronised with mains
Type of contact	Changeover contact
Switching output	Potential-free and phase-independent
Stand-by consumption	0,9 W
Housing and insulation material	High-temperature resistant, self-extinguishing thermoplastic
Type of protection	IP 20
Protection class	II according to EN 60 730-1
Ambient temperature	-10 °C … +55 °C

Connection example

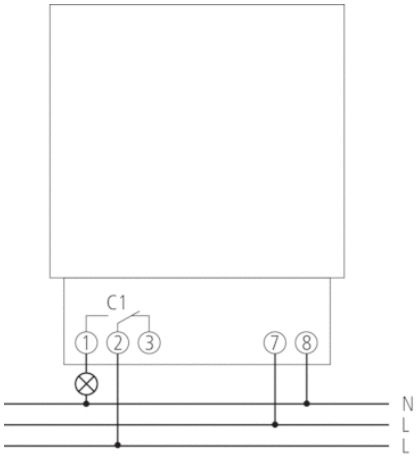

Scale drawings

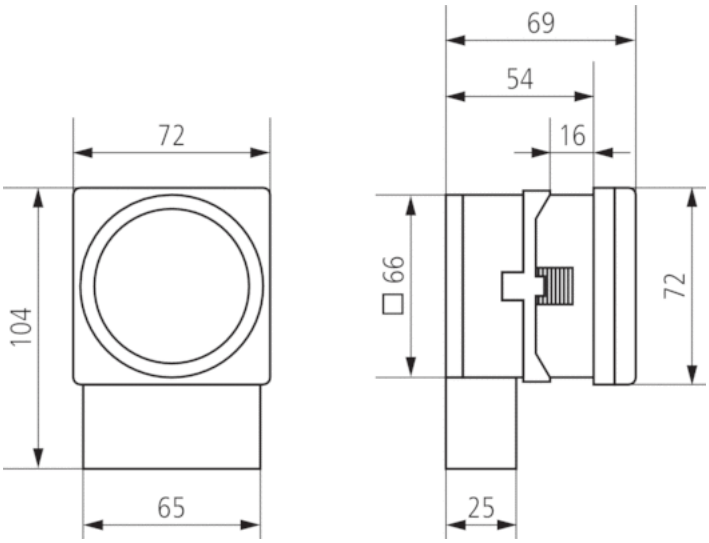

Accessories

Snap-on mounting 72 x 72

- Article number: 9070071
  Details ▸ www.theben.de

