W1G230-EB89-01

EC axial fan - ESM

sickled blades (S series)

ESM wall ring



ebm-papst Mulfingen GmbH & Co. KG
Bachmühle 2 · D-74673 Mulfingen
Phone +49 7938 81-0
Fax +49 7938 81-110
info1@de.ebmpapst.com
www.ebmpapst.com

Limited partnership · Headquarters Mulfingen
County court Stuttgart · HRA 590344

General partner Elektrobau Mulfingen GmbH · Headquarters Mulfingen
County court Stuttgart · HRB 590142

Nominal data

Type	**W1G230-EB89-01**
Motor	**M1G055-BD**

Phase		1~	1~
Nominal voltage	VAC	230	230
Frequency	Hz	50/60	50/60
Type of data definition		ml	
Speed (rpm)	min^{-1}	1500	1000
Power input	W	26	
Current draw	A	0.2	
Max. back pressure	Pa	36	
Min. ambient temperature	°C	-30	-30
Max. ambient temperature	°C	50	50

ml = Max. load · me = Max. efficiency · fa = Running at free air · cs = Customer specs · cu = Customer unit
Subject to alterations

EC axial fan - ESM

sickled blades (S series)

ESM wall ring

Technical features

Mass	1 kg
Size	230 mm
Motor size	55
Material of blades	PA plastic
Material of wall ring	PP plastic
Number of blades	5
Direction of air flow	V
Direction of rotation	Counter-clockwise, seen on rotor
Type of protection	IP55
Insulation class	"B"
Humidity (F) / environmental protection class (H)	H1+
Max. permissible ambient motor temp. (transp./ storage)	+80 °C
Min. permissible ambient motor temp. (transp./storage)	-40 °C
Mounting position	Any
Condensation drainage holes	None
Operation mode	S1
Motor bearing	Ball bearing
Technical features	- Speed selection max/min - ESM+ extensible with plug-in module - Soft start - Over-temperature protected motor
Speed steps	2
EMC interference immunity	Acc. to EN 61000-6-2 (industrial environment)
EMC harmonics	Acc. to EN 61000-3-2/3
EMC interference emission	Acc. to EN 61000-6-3 (household environment)
Motor protection	Thermal overload protector (TOP) wired internally
Cable exit	Lateral
Protection class	II
Product conforming to standard	EN 60335-1; EN 60335-2-24; EN 60335-2-80; EN 60335-2-89; CE
Approval	VDE; CSA C22.2 no. 77; EAC; UL 1004-3

ebm-papst Mulfingen GmbH & Co. KG · Bachmühle 2 · D-74673 Mulfingen · Phone +49 (0) 7938 81-0 · Fax +49 (0) 7938 81-110 · info1@de.ebmpapst.com · www.ebmpapst.com

EC axial fan - ESM

sickled blades (S series)

ESM wall ring

Product drawing

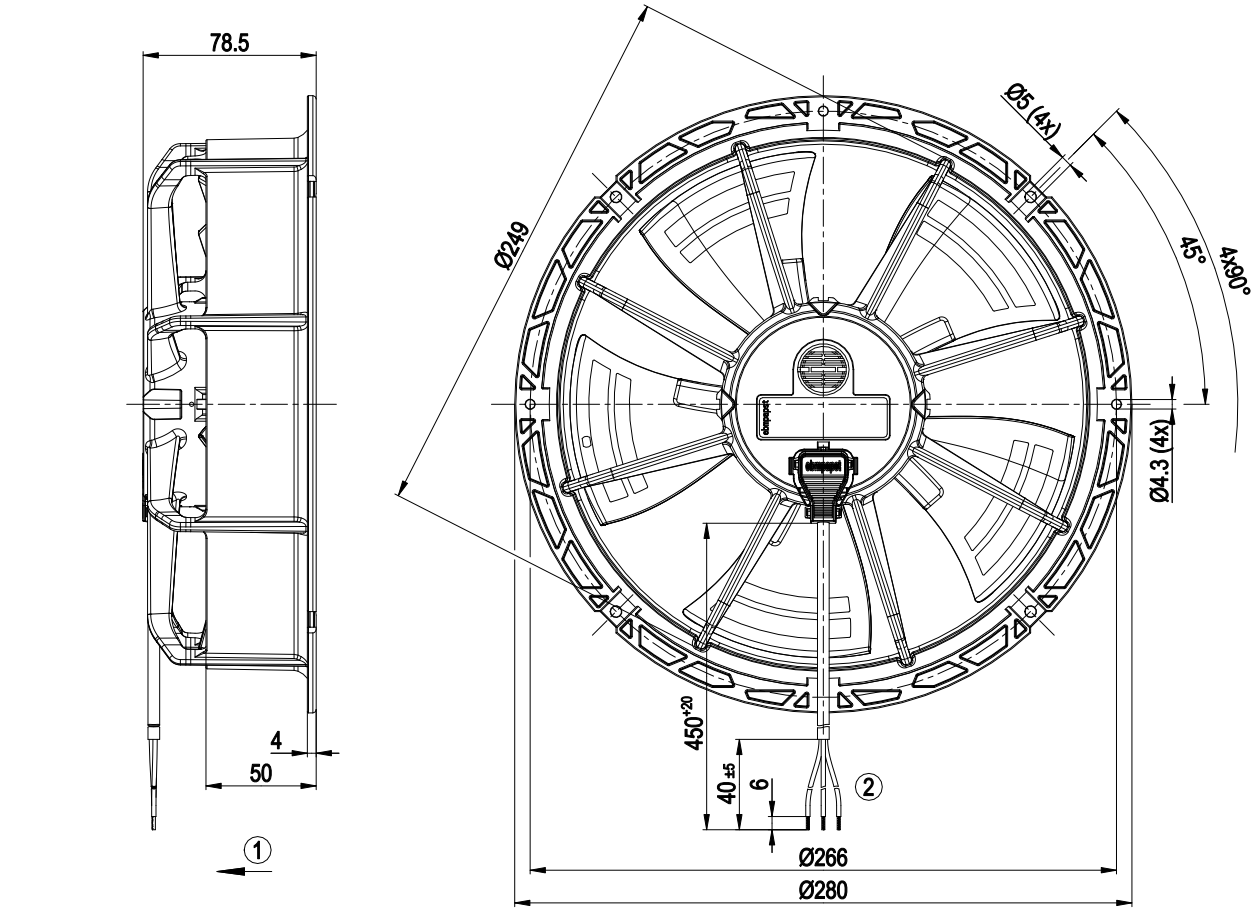

1	Direction of air flow "V"
2	Direction of rotation counter-clockwise, seen on rotor
3	Connection line AWG20; 3 x brass lead tips crimped

Connection screen

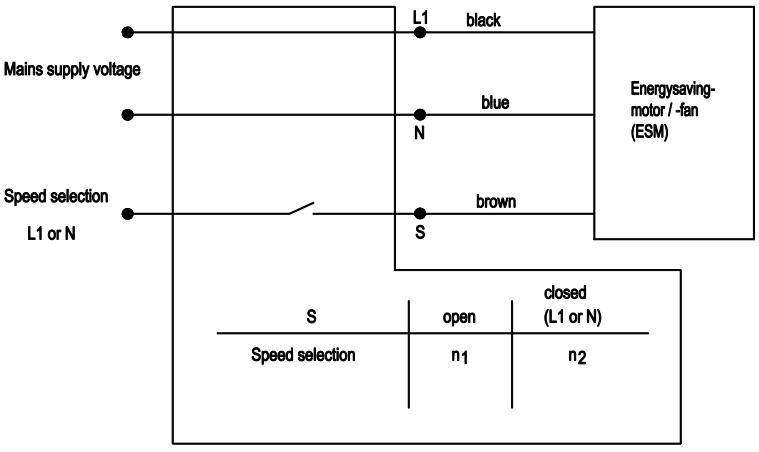

ebm-papst Mulfingen GmbH & Co. KG · Bachmühle 2 · D-74673 Mulfingen · Phone +49 (0) 7938 81-0 · Fax +49 (0) 7938 81-110 · info1@de.ebmpapst.com · www.ebmpapst.com

EC axial fan - ESM

sickled blades (S series)

ESM wall ring

Charts: Air flow 50 Hz

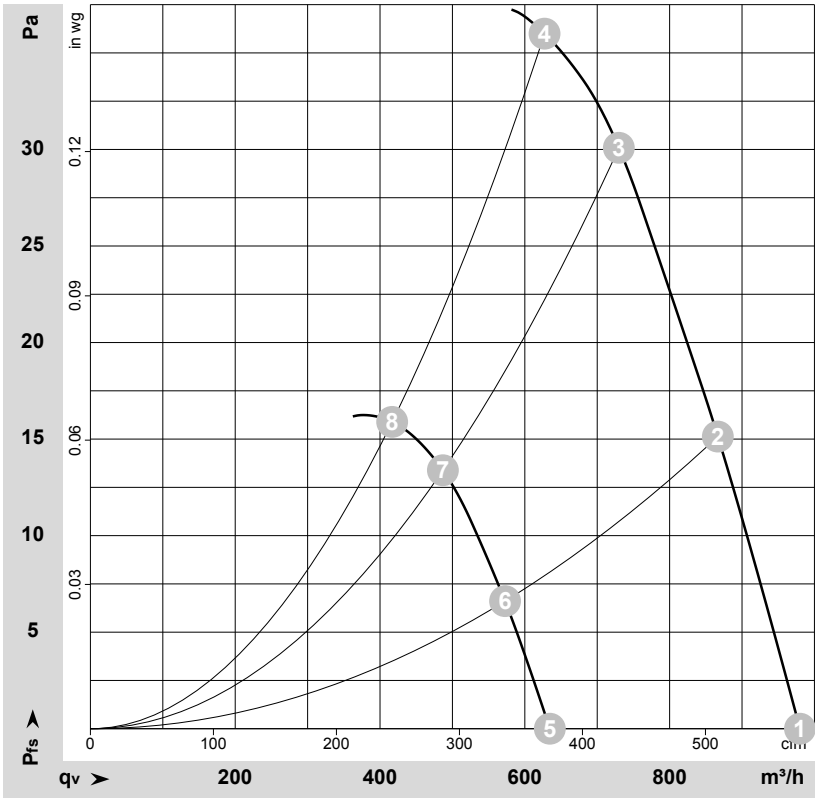

ρ = 1.15 kg/m³ ± 2 %

Measurement: LU-112479-1
Measurement: LU-112480-1

Air performance measured as per ISO 5801 Installation category A. For detailed information on the measuring set-up, please contact ebm-papst. Suction-side noise levels: LwA measured as per ISO 13347 / LpA measured with 1m distance to fan axis. The values given are valid under the measuring conditions mentioned above and may vary according to the actual installation situation. With any deviation from the standard set-up, the specific values have to be checked and reviewed with the unit installed.

Measured values

	U	f	n	P_{ed}	I	LpA_{in}	LwA_{in}	q_V	p_{fs}	q_V	p_{fs}
	V	Hz	min^{-1}	W	A	dB(A)	dB(A)	m^3/h	Pa	cfm	in. wg
1	230	50	1500	24	0.19	51	58	980	0	575	0.00
2	230	50	1500	25	0.18	51	58	865	15	510	0.06
3	230	50	1500	25	0.19	50	58	730	30	430	0.12
4	230	50	1500	26	0.20	48	56	625	36	370	0.14
5	230	50	1000	10.0	0.09	39	48	635	0	375	0.00
6	230	50	1000	11	0.09	39	48	575	7	335	0.03
7	230	50	1000	11	0.10	40	48	485	13	285	0.05
8	230	50	1000	11	0.09	42	50	415	16	245	0.06

U = Supply voltage · f = Frequency · n = Speed (rpm) · P_{ed} = Power input · I = Current draw · LpA_{in} = Sound pressure level inlet side · LwA_{in} = Sound power level inlet side · q_V = Air flow
p_{fs} = Pressure increase

ebm-papst Mulfingen GmbH & Co. KG · Bachmühle 2 · D-74673 Mulfingen · Phone +49 (0) 7938 81-0 · Fax +49 (0) 7938 81-110 · info1@de.ebmpapst.com · www.ebmpapst.com