Deep groove ball bearings

6205-C-2Z (Series 62..-C-2Z)

modified internal construction (Generation C), main dimensions to DIN 625-1, gap seals on both sides

The datasheet is only an overview of dimensions and basic load ratings of the selected product. Please always observe all the guidelines in these overview pages. Further information is given on many products under the menu item "Description". You can also order comprehensive information via the Catalogue selection system (http://www.fag.de/content.fag.de/en/mediathek/library/library.jsp) or by telephone on +49 (91 32) 82 - 28 97.

d	25	mm	
D	52	mm	
B	15	mm	
D_2	46,4	mm	
d_2	31,4	mm	
$D_{a\ max}$	46,4	mm	
$d_{a\ min}$	30,6	mm	
$r_{a\ max}$	1	mm	
r_{min}	1	mm	
m	0,133	kg	Mass
C_r	15000	N	Basic dynamic load rating, radial
C_{0r}	7800	N	Basic static load rating, radial
n_G	18400	1/min	Limiting speed
n_B	16000	1/min	Reference speed
C_{ur}	485	N	Fatigue limit load, radial
f_0	13,8		Calculation factor

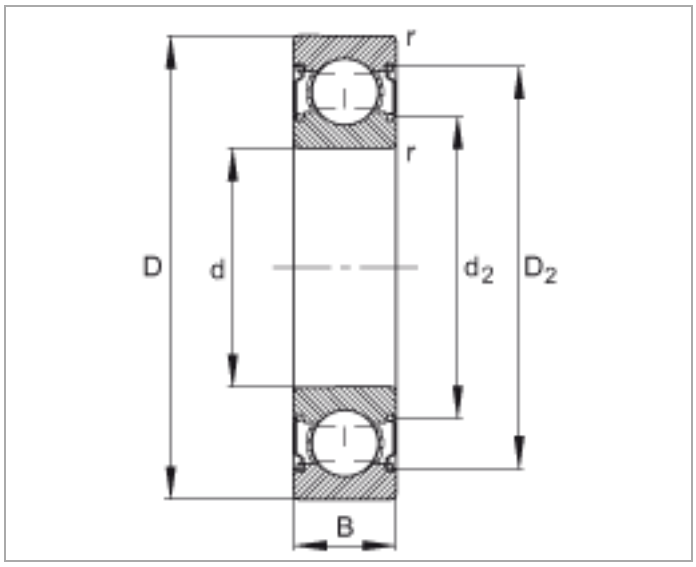
r
r
D
d
d2
D2
B

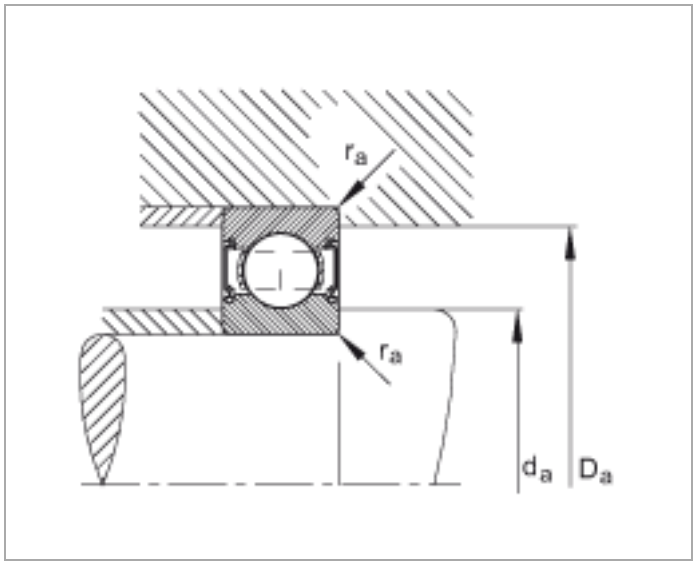
ra
ra
da
Da