Field-Attachable Connectors

BCC M478-0000-1A-000-43X834-000
Order Code: BCC04MC

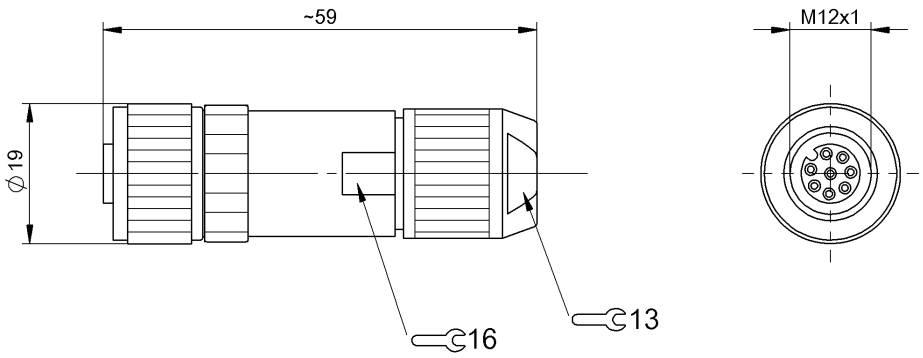

Basic features

Approval/Conformity	EAC WEEE

Electrical connection

Cable diameter D	4...8 mm
Connection	M12x1-Female, Straight, 8-pin, A-coded
Contact shield	Iris spring
Number of connectable contacts	8
System	Can be fabricated

Electrical data

Operating voltage Ub	30 VDC / 30 VAC
Rated current (40 °C)	1.75 A

Environmental conditions

Ambient temperature	-25...85 °C
IP rating	IP67

Material

Material contact carrier	PA
Material contacts	Bronze
Material cover nut	Die-cast zinc nickel-plated
Material grip	Die-cast zinc

Mechanical data

Connection cross-section	0.14...0.34 mm²
Type of wire mounting	IDC

Remarks

Enclosure rating per IEC 60529, only in screwed state with the associated mating piece.

Connector Drawings

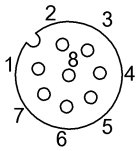

PIN 1-8 usable