PN7370

Pressure sensor with display

PN-400-SEU76-QFRKG/US/ /V

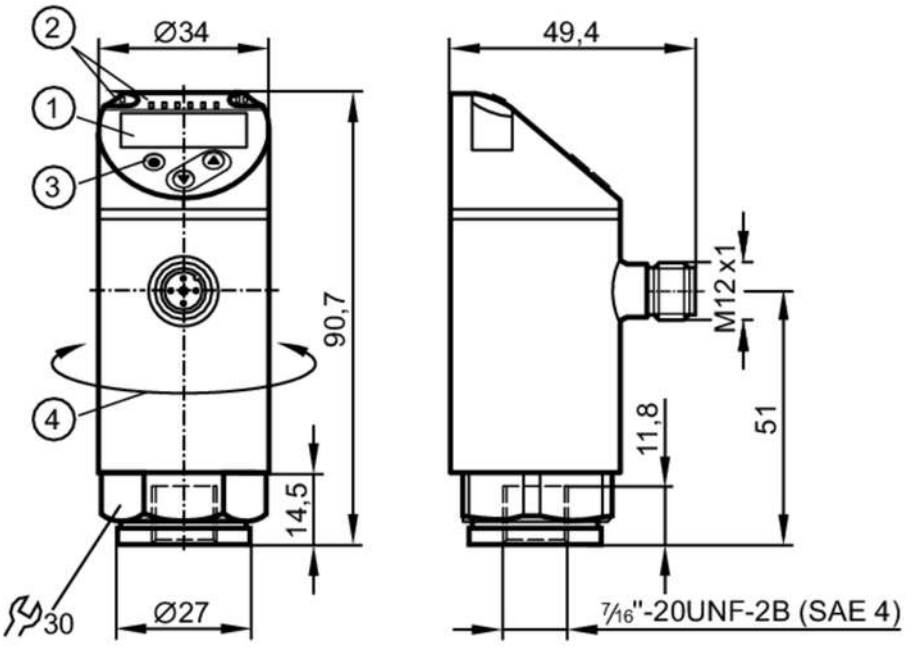

1 alphanumeric display 4-digit red/green
2 LEDs Display unit / switching status
3 programming button
4 upper part of the housing can be rotated 345°

Product characteristics			
Number of inputs and outputs	Number of digital outputs: 2		
Measuring range	0...400 bar	0...5800 psi	0...40 MPa
Process connection	threaded connection 7/16" - 20 UNF internal thread		
Application			
Special feature	Gold-plated contacts		
Measuring element	metallic thin film cell		
Application	for industrial applications		
Media	liquids and gases		
Medium temperature [°C]	-25...80		
Min. bursting pressure	1700 bar	24650 psi	170 MPa
Pressure rating	800 bar	11580 psi	80 MPa
Type of pressure	relative pressure		
Electrical data			
Operating voltage [V]	18...30 DC; (to SELV/PELV)		
Current consumption [mA]	< 35		
Min. insulation resistance [MΩ]	100; (500 V DC)		
Protection class	III		
Reverse polarity protection	yes		
Power-on delay time [s]	0.3		
Integrated watchdog	yes		

PN7370

Pressure sensor with display

PN-400-SEU76-QFRKG/US/ /V

Inputs / outputs			
Number of inputs and outputs	Number of digital outputs: 2		
Outputs			
Total number of outputs	2		
Output signal	switching signal; IO-Link; (configurable)		
Electrical design	PNP/NPN		
Number of digital outputs	2		
Output function	normally open / normally closed; (parameterisable)		
Max. voltage drop switching output DC [V]	2.5		
Permanent current rating of switching output DC [mA]	150; (200 (...60 °C) 250 (...40 °C))		
Switching frequency DC [Hz]	< 170		
Short-circuit protection	yes		
Type of short-circuit protection	pulsed		
Overload protection	yes		
Measuring/setting range			
Measuring range	0...400 bar	0...5800 psi	0...40 MPa
Factory setting / CMPT = 2			
Set point SP	4...400 bar	40...5800 psi	0.4...40 MPa
Reset point rP	2...398 bar	20...5780 psi	0.2...39.8 MPa
Min. difference between SP and rP	2 bar	10 psi	0.2 MPa
In steps of	2 bar	20 psi	0.2 MPa
Status_B High Resolution / CMPT = 3			
Set point SP	3...400 bar	49...5802 psi	0.3...40 MPa
Reset point rP	1...398 bar	20...5773 psi	0.1...39.8 MPa
Min. difference between SP and rP	2 bar	30 psi	0.2 MPa
In steps of	1 bar	1 psi	0.1 MPa
Accuracy / deviations			
Switch point accuracy [% of the span]	< ± 0,5		
Repeatability [% of the span]	< ± 0,1; (with temperature fluctuations < 10 K)		
Characteristics deviation [% of the span]	< ± 0,25 (BFSL) / < ± 0,5 (LS); (BFSL = Best Fit Straight Line; LS = limit value setting)		
Hysteresis deviation [% of the span]	< ± 0,25		
Long-term stability [% of the span]	< ± 0,05; (per 6 months)		
Temperature coefficient zero point [% of the span / 10 K]	0,2; (-25...80 °C)		
Temperature coefficient span [% of the span / 10 K]	0,2; (-25...80 °C)		

PN7370

Pressure sensor with display

PN-400-SEU76-QFRKG/US/ /V

Response times			
Response time	[ms]	< 3	
Delay time programmable dS, dr	[s]	0...50	
Software / programming			
Parameter setting options		hysteresis / window; normally open / normally closed; switching logic; switch-on/switch-off delay; Damping; Display unit	
Interfaces			
Communication interface		IO-Link	
Transmission type		COM2 (38,4 kBaud)	
IO-Link revision		1.1	
SDCI standard		IEC 61131-9	
SIO mode		yes	
Required master port type		A; (when pin 2 not connected: B)	
Supported DeviceIDs		**Type of operation**	**DeviceID**
		Factory setting / CMPT = 2	450
		Status_B High Resolution / CMPT = 3	627
Note		For further information please see the IODD PDF file under "Downloads"	
Factory setting / CMPT = 2			
Profiles		Smart Sensor: Process Data Variable; Device Identification, Device Diagnosis	
Min. process cycle time	[ms]	2.3	
IO-Link resolution pressure		1 bar	0.1 MPa
IO-Link process data (cyclical)		**function**	**bit length**
		pressure	14
		binary switching information	2
IO-Link functions (acyclical)		application specific tag	
Status_B High Resolution / CMPT = 3			
Profiles		Smart Sensor ED2: Digital Measuring Sensor (0x000A), Identification and Diagnosis (0x4000)	
Min. process cycle time	[ms]	3	
IO-Link resolution pressure		0.2 bar	0.02 MPa
IO-Link process data (cyclical)		**function**	**bit length**
		pressure	16
		device status	4
		binary switching information	2
IO-Link functions (acyclical)		application specific tag	
Operating conditions			
Ambient temperature	[°C]	-25...80	
Storage temperature	[°C]	-40...100	
Protection		IP 65; IP 67	
Tests / approvals			
EMC		DIN EN 61000-6-2	
		DIN EN 61000-6-3	
Shock resistance		DIN EN 60068-2-27	50 g (11 ms)
Vibration resistance		DIN EN 60068-2-6	20 g (10...2000 Hz)
MTTF	[years]	214	

PN7370

Pressure sensor with display

PN-400-SEU76-QFRKG/US/ /V

UL approval		UL Approval no.	J003
Pressure Equipment Directive		Sound engineering practice; can be used for group 2 fluids; group 1 fluids on request	

Mechanical data

Weight	[g]	218.5
Housing		cylindrical
Dimensions	[mm]	Ø 34 / L = 90.7
Materials		stainless steel (630/1.4542/17-4 PH); stainless steel (316L/1.4404); PBT+PC-GF30; PBT-GF20; PC
Materials (wetted parts)		stainless steel (630/1.4542/17-4 PH)
Min. pressure cycles		100 million
Tightening torque	[Nm]	25...35; (recommended tightening torque; depends on lubrication, seal and pressure rating)
Process connection		threaded connection 7/16" - 20 UNF internal thread
Restrictor element integrated		no (can be retrofitted)

Displays / operating elements

Display	Display unit	3 x LED, green (bar, psi, MPa)
	switching status	2 x LED, yellow
	measured values	alphanumeric display, red/green 4-digit

Remarks

Pack quantity	1 pcs.

Electrical connection

Connector: 1 x M12; coding: A; Contacts: gold-plated



PN7370

Pressure sensor with display

PN-400-SEU76-QFRKG/US/ /V

Connection

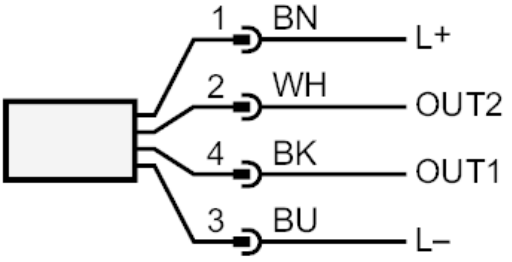

OUT1	switching output IO-Link
OUT2	switching output
	colours to DIN EN 60947-5-2
	Core colours :
BK =	black
BN =	brown
BU =	blue
WH =	white