KQ1001

Continuous level sensor

KQ-5xxxNFPKG/IO/0,1M/US

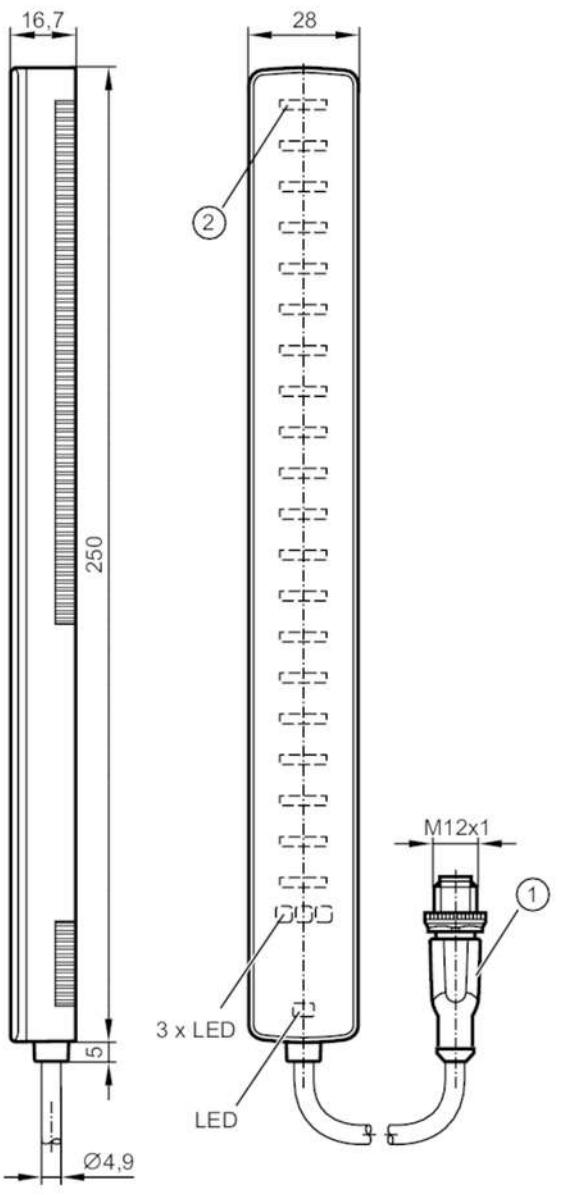

1 connector
2 LED bar graph

Product characteristics		
Electrical design		PNP/NPN; (parameterisable)
Communication interface		IO-Link
Dimensions	[mm]	250 x 28 x 16.7
Application		
Application		Continuous level measurement behind non-metallic and non-conductive surfaces
Media		dry bulk material; aqueous solutions; oils
Cannot be used for		highly adhesive media

KQ1001

Continuous level sensor

KQ-5xxxNFPKG/IO/0,1M/US

Electrical data		
Operating voltage	[V]	10...30 DC; (IO-Link: 18...30 DC)
Current consumption	[mA]	< 50
Protection class		III
Reverse polarity protection		yes
Max. power-on delay time	[ms]	1300
Measuring principle		capacitive
Inputs / outputs		
Number of inputs and outputs		Number of digital outputs: 3
Outputs		
Electrical design		PNP/NPN; (parameterisable)
Number of digital outputs		3
Permanent current rating of switching output DC	[mA]	200
Max. resistance switching output	[Ω]	8
Short-circuit protection		yes
Type of short-circuit protection		pulsed
Overload protection		yes
Detection zone		
Measuring range	[mm]	< 200
Measuring/setting range		
Detection range	[mm]	228
Set point SP	[%]	5...95
Reset point rP	[%]	4...94
In steps of	[%]	1
Accuracy / deviations		
Repeatability	[% of the final value]	2
Offset deviation	[% of the final value]	4
Resolution	[% of the final value]	1
Linearity deviation	[% of the final value]	1
Response times		
Response time	[ms]	1300
Software / programming		
Parameter setting options		Damping; hysteresis / window; fault indication; diagnostic function; sensitivity; internal temperature; limitation of measuring range; Adjustable switching delay; zero-point calibration; direction of installation; LEDs can be deactivated
Interfaces		
Communication interface		IO-Link
Transmission type		COM2 (38,4 kBaud)
IO-Link revision		1.1

KQ1001

Continuous level sensor

KQ-5xxxNFPKG/IO/0,1M/US

SDCI standard		IEC 61131-9	
Profiles		Digital Measuring Sensor Profile, Common Profile	
SIO mode		yes	
Required master port type		A	
Process data analogue		1	
Process data binary		3	
Min. process cycle time	[ms]	9.6	
IO-Link process data (cyclical)		function	bit length
		process value	16
		exponent	8
		device status	4
		binary switching information	3
IO-Link functions (acyclical)		direction of installation; limitation of sensor elements; sensitivity; minimum recognition threshold; Performance in case of a fault; error delay; Damping; LED mode; switch-on cycle counter; operating hours counter; switching cycles counter; min./max. process value; internal temperature; min./max. internal temperature; diagnostic data for level	
Supported DeviceIDs		Type of operation	DeviceID
		Default	924
Note		For further information please see the IODD PDF file under "Downloads"	
Operating conditions			
Applications		DIN EN 60654-1 application class B2	
Ambient temperature	[°C]	-20...80	
Storage temperature	[°C]	-25...85	
Protection		IP 65	
Tests / approvals			
EMC		DIN EN 61000-6-4 30 - 230 MHz	40 dBµV/m QP / 10 m distance
		230 - 1 GHz	47 dBµV/m QP / 10 m distance
		DIN EN 61000-4-2	± 25 kV AD / ± 25 kV CD
		DIN EN 61000-4-3	80 MHz - / 1 GHz 10 V/m
		DIN EN 61000-4-4	± 2.5 kV / 5 kHz
			± 2.5 kV / 100 kHz
		DIN EN 61000-4-6	10 V
Shock resistance		EN 60068-2-27	15 g 11 ms
Vibration resistance		EN 60068-2-6	5 g (10...2000 Hz)
MTTF	[years]	290.43	
UL approval		Ta	-25...60 °C
		Enclosure type	Type 1
		power supply	Limited Voltage/Current
		UL Approval no.	D006
		File number UL	E174191
Mechanical data			
Weight	[g]	377.5	
Dimensions	[mm]	250 x 28 x 16.7	
Materials		PBT; PC;	

KQ1001

Continuous level sensor

KQ-5xxxNFPKG/IO/0,1M/US

Displays / operating elements		
Display	operation	1 x LED, green
	switching status	3 x LED, yellow
	function	20 x LED, green

Accessories	
Items supplied	adhesive tape: 1 x 23 mm x 240 mm
Accessories (optional)	Mounting adapter: 2, E12675
	Mounting adapter: 2, E12676
	Fixing strap: 5, E10880
	adhesive tape: 10, E12677

Remarks	
Remarks	when used on IO-Link class B masters switching outputs OUT2, OUT3 have to be switched off
Pack quantity	1 pcs.

Electrical connection

Connector: 1 x M12; coding: A

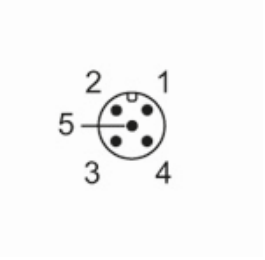

Connection

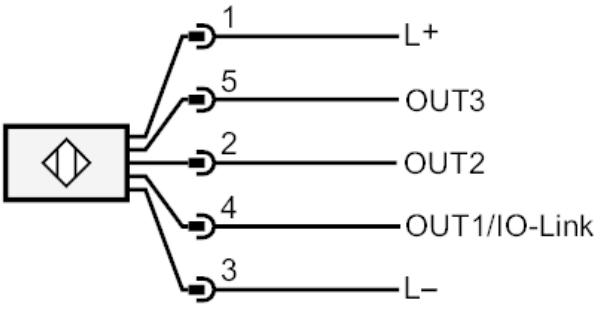

Electrical connection - plug

Cable: 0.1 m, PUR