TABLE 1

MOLEX P/N	ENG. NO.	CABLE LENGTH (mm)	LED
1202510109	BKB4120-FBW-003	300	NO
1202510110	BKB4120-FBW-01	1000	NO
1202510111	BKB4120-FBW-05	5000	NO
1202510112	BKB4120-FBW-10	10000	NO
1202510113	BKB412N-FBW-003	300	YES
1202510114	BKB412N-FBW-05	5000	YES

19 POLE MALE FACE VIEW

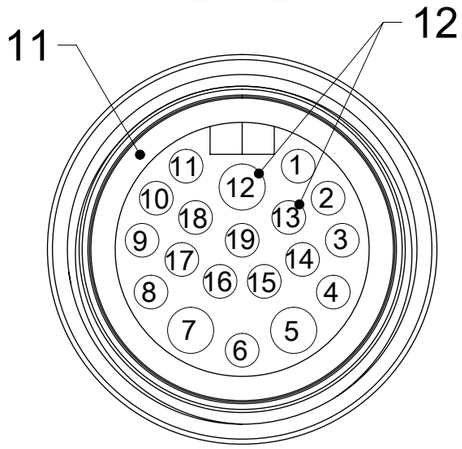

SCALE 2:1

PIN	COLOR
3	GREY
4	RED/BLUE
5	BLUE
6	GREEN
7	BROWN
8	WHITE/GREEN
12	YELLOW/GREEN
14	BROWN/GREEN
15	WHITE
16	YELLOW
19	GREY/PINK

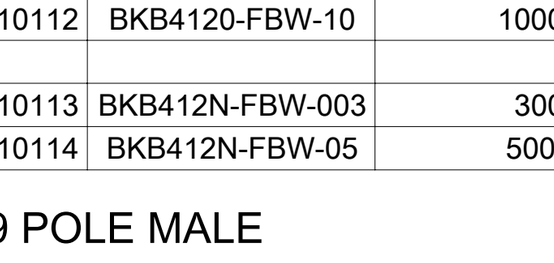

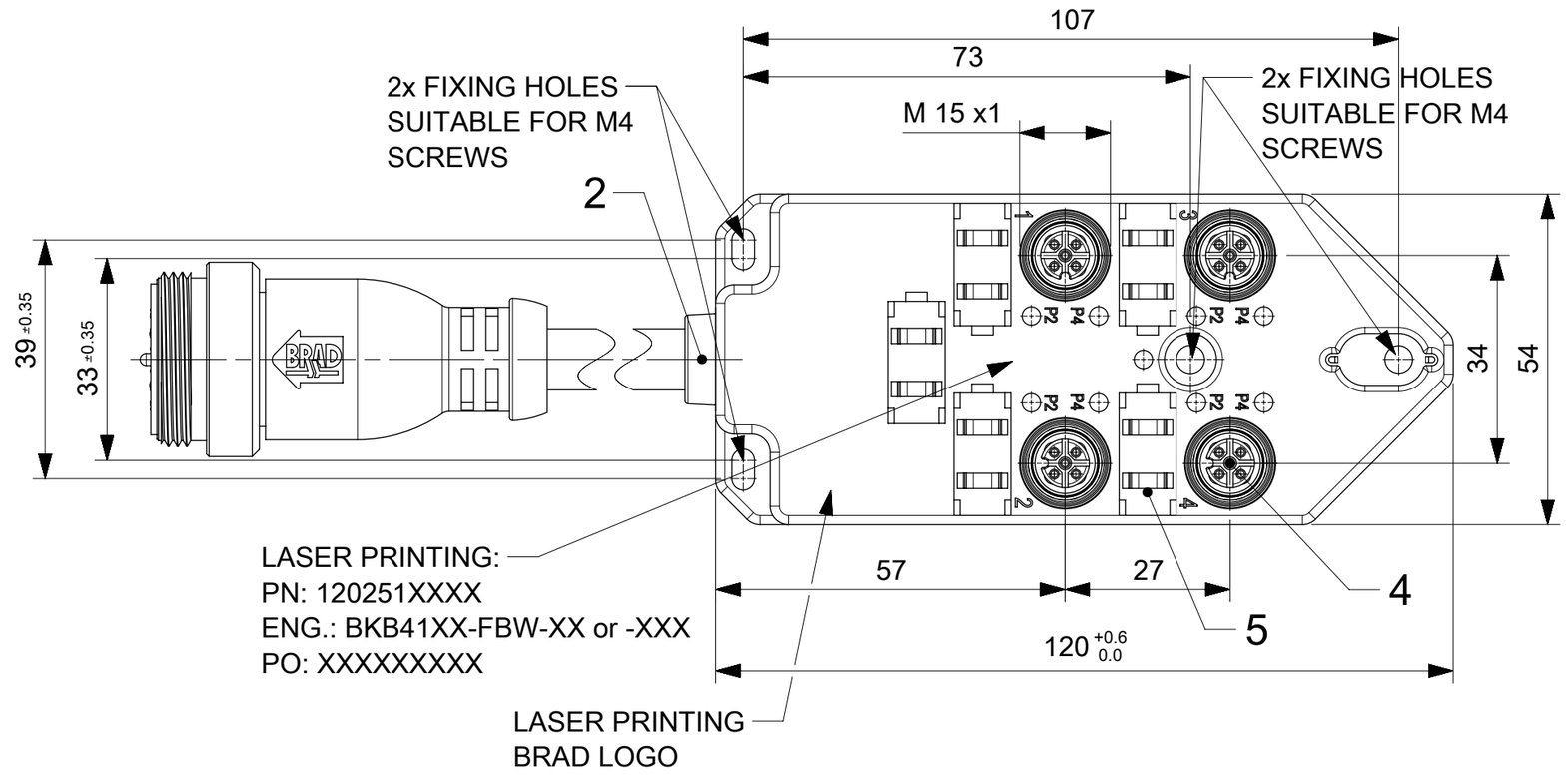

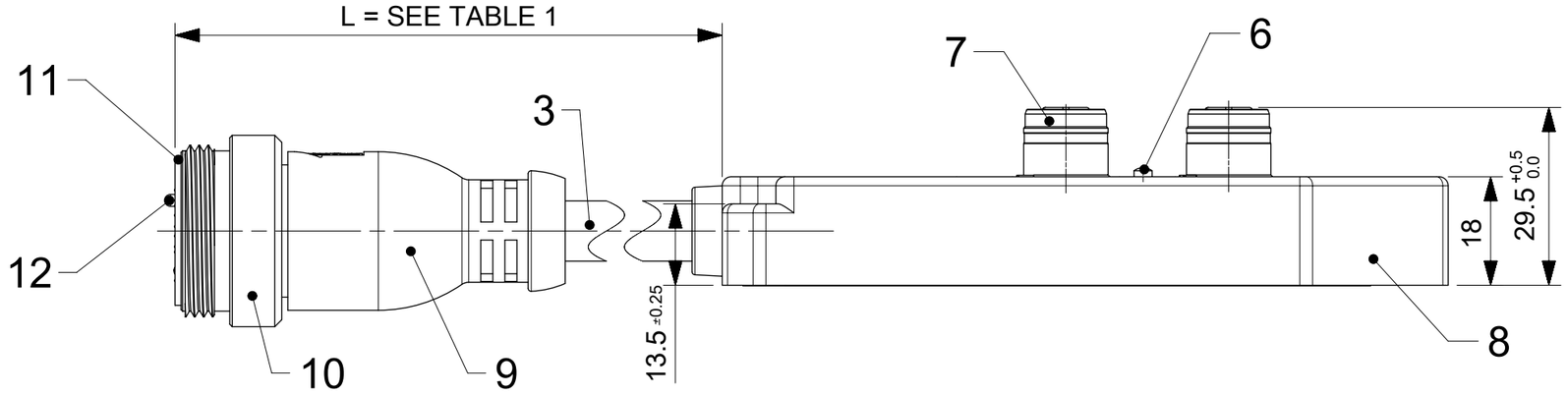

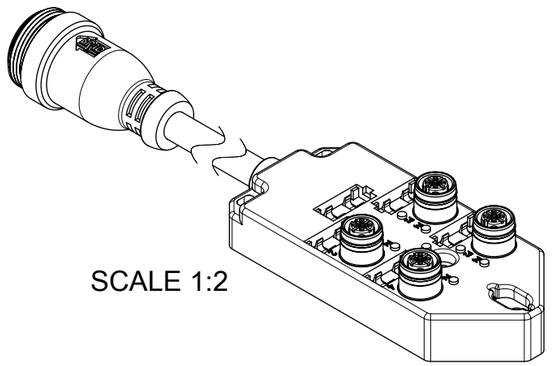

SCALE 1:2

GENERAL CHARACTERISTICS:

ELECTRICAL AND MECHANICAL DATA ACC. TO IEC 61076-2-101

NOMINAL VOLTAGE:	10-30 V DC
AMPERE RATING:	4 A PER PORT / 12 A MAX
AMPERE RATING WITH UL REGISTRATION:	3 A PER PORT / 9 A MAX
IP DEGREE OF PROTECTION:	IP 67
TEMPERATURE RANGE:	-25°C to + 85°C

DOCUMENT STATUS	P1	RELEASE DATE	2020/02/05 10:52:06

THIS DRAWING CONTAINS INFORMATION THAT IS PROPRIETARY TO MOLEX ELECTRONIC TECHNOLOGIES, LLC AND SHOULD NOT BE USED WITHOUT WRITTEN PERMISSION

SYMBOLS: F = 0, E = 0, B = 0, S = 0, ▼ = 0, C = 0, ☒ = 0, ■ = 0, ▽ = 0

DIMENSION UNITS: mm — SCALE: 1:1

GENERAL TOLERANCES (UNLESS SPECIFIED)

ANGULAR TOL	± 1.0 °
4 PLACES	±
3 PLACES	±
2 PLACES	± 0.05
1 PLACE	± 0.3
0 PLACES	± 0.5

DRAFT WHERE APPLICABLE MUST REMAIN WITHIN DIMENSIONS

CURRENT REV DESC: INITIAL RELEASE

EC NO: 631635

DRWN:	MDHARMANTI	2020/01/28
CHK'D:	RSILLER	2020/02/05
APPR:	RSILLER	2020/02/05

INITIAL REVISION:

DRWN:	SSM	2019/01/14
APPR:	RSILLER	2020/01/17

THIRD ANGLE PROJECTION | DRAWING: A3-SIZE | SERIES: 120251

molex

MPIS U12 NOS 5P 4PT 0.3M MC 19P BK

PRODUCT CUSTOMER DRAWING

DOCUMENT NUMBER	DOC TYPE	DOC PART	REVISION
1202510109	PSD	000	A1

MATERIAL NUMBER	CUSTOMER	SHEET NUMBER
SEE TABLE 1	GENERAL MARKET	1 OF 2

FORMAT: master-tb-prod-A3
REVISION: H
DATE: 2018/01/18

Wiring Diagram NON LED Dual

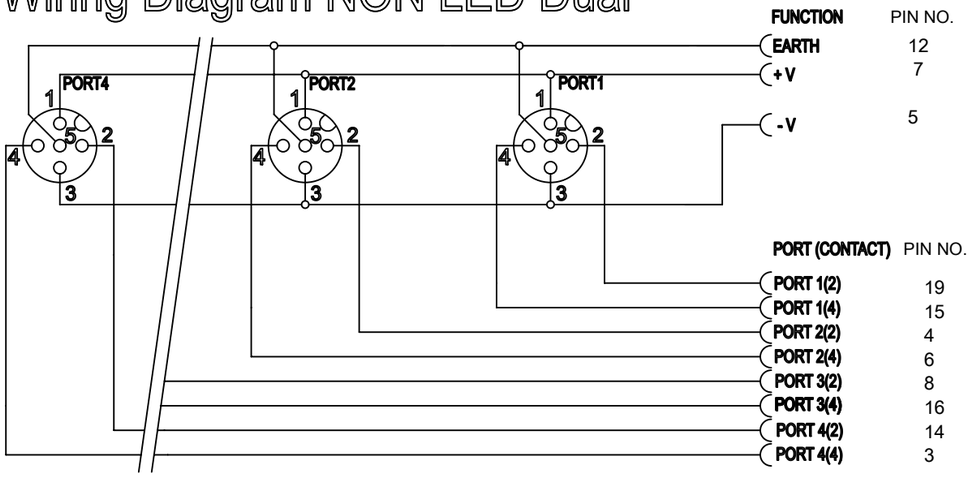

Wiring Diagram NPN Dual

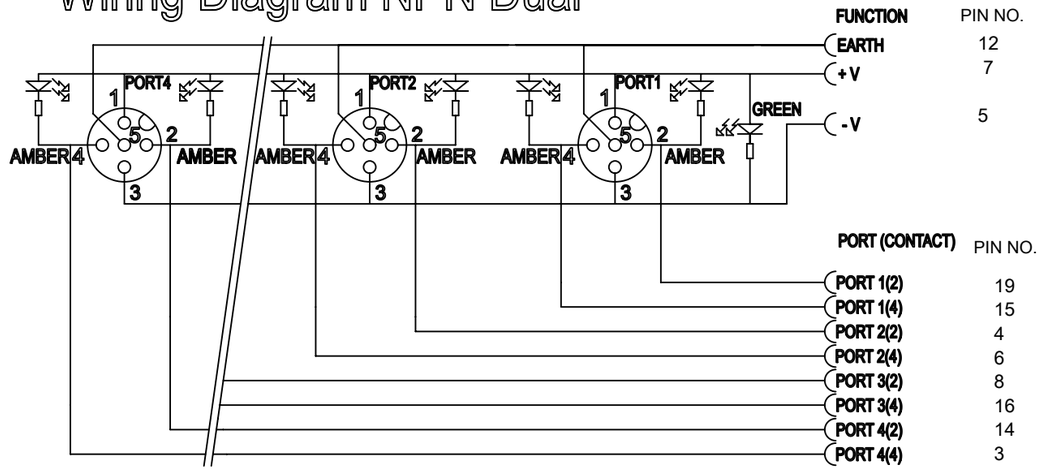

TABLE 2 BILL OF MATERIAL

ITEM	DESCRIPTION	MATERIAL	FINISH
1	LABEL	ABS	WHITE
2	CABLE PLATE	PBT	BLACK
3	CABLE	TPU BASED	BLACK
4	CONTACT	BRASS	GOLD OVER NICKEL
5	O-RING	FPM	RED
6	LED	NO LED = PA	BLACK
		WITH LED = PA	TRANSPARENT
7	SHELL	BRASS	NICKEL PLATED
8	HOUSING	PBT	BLACK
9	OVERMOLDING	PVC	YELLOW
10	COUPLING NUT	ZINC DIE CAST	BLACK
11	INSERT	PVC	BLACK
12	CONTACT	BRASS	GOLD OVER NICKEL

CABLE LENGTH TOLERANCES

LENGTH [m]	TOLERANCE [mm]
0-1	+40
>1-5	+60
>5-10	+80
>10-20	+140
>20-30	+160
>30	+1% length

THIS DRAWING CONTAINS INFORMATION THAT IS PROPRIETARY TO MOLEX ELECTRONIC TECHNOLOGIES, LLC AND SHOULD NOT BE USED WITHOUT WRITTEN PERMISSION

SYMBOLS: FA = 0, FC = 0, FB = 0, S = 0, ▼ = 0, C = 0, ☒ = 0, ■ = 0, ▽ = 0

DIMENSION UNITS: mm | SCALE: 1:1

GENERAL TOLERANCES (UNLESS SPECIFIED)

ANGULAR TOL	±	1.0 °
4 PLACES	±	
3 PLACES	±	
2 PLACES	±	0.05
1 PLACE	±	0.3
0 PLACES	±	0.5

DRAFT WHERE APPLICABLE MUST REMAIN WITHIN DIMENSIONS

CURRENT REV DESC: INITIAL RELEASE

EC NO: 631635
DRWN: MDHARMANTI 2020/01/28
CHK'D: RSILLER 2020/02/05
APPR: RSILLER 2020/02/05

INITIAL REVISION:
DRWN: SSM 2019/01/14
APPR: RSILLER 2020/01/17

THIRD ANGLE PROJECTION | DRAWING: A3-SIZE | SERIES: 120251

molex

MPIS U12 NOS 5P 4PT 0.3M MC 19P BK

PRODUCT CUSTOMER DRAWING

DOCUMENT NUMBER	DOC TYPE	DOC PART	REVISION
1202510109	PSD	000	A1

MATERIAL NUMBER	CUSTOMER	SHEET NUMBER
SEE TABLE 1	GENERAL MARKET	2 OF 2

DOCUMENT STATUS	P1	RELEASE DATE	2020/02/05 10:52:06

FORMAT: master-tb-prod-A3
REVISION: H
DATE: 2018/01/18